SAN ANTONIO

WATER SYSTEM

JOB NO: 04-5535

PLANS FOR SANITARY SEWER CONSTRUCTION

MARKET SQUARE REHABILITATION
PHASE I

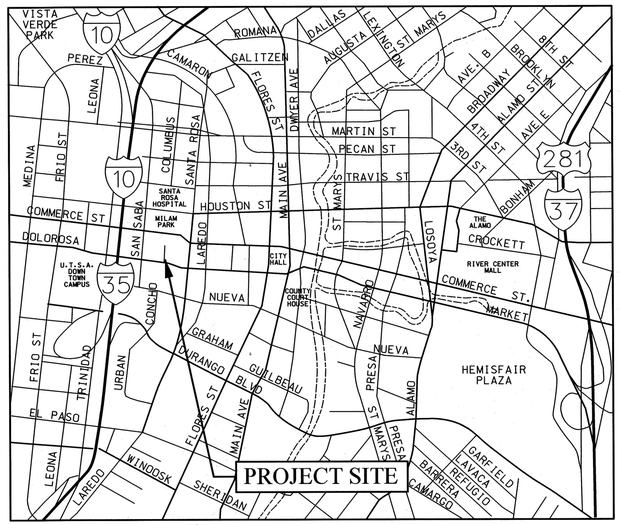

ITEM NO.	DESCRIPTION	UNIT	FINAL QUANTITIES
848	8" PVC GRAVITY SANITARY SEWER PIPE (0'-6")	LF	160.00
848	8" PVC GRAVITY SANITARY SEWER PIPE (6'-10")	LF	420.00
852.1	SANITARY SEWER MANHOLE 0'-6"	EA	3.00
954	SANITARY SEWER LATERALS	LF	471.00
854A	ONE WAY SANITARY SEWER CLEANOUT	EA	17.00

MATERIAL
PIPE - JOHN MANSVILLE PIPE (SDR-26)
MANHOLE - OLD CASTLE

AS BUILT/PLAN RECORD DRAWINGS
SAWS JOB NO 04-5535
COMPLETION DATE 7/10/07
CONTRACTOIR: JERDON ENTERPRISE LP
INSPECTOR: CALVIN KNUPPER

AS-BUILT/PLAN OF RECORD

I HERE BY CERTIFY THAT THIS AS-BUILT/PLAN OF RECORD IS TRUE AND CORRECT TO THE BEST OF MY KNOWLEDGE AND WAS PREPARED UNDER MY SUPERVISION.

Chan Kunning 7-9-10

NOTE: INFORMATION FOR THESE AS-BUILT/PLAN OF RECORD DRAWINGS WAS SUPPLIED BY THE CONTRACTOR AND SAWS. MYLAR PLANS IN DIGITAL FORMAT ARE REPRESENTATIVE OF THAT INFORMATION WHICH WAS SUPPLIED.

STATE OF TEXAS
KUM WING CHAN
65399
REGISTERED PROFESSIONAL ENGINEER

K.M. NG & ASSOCIATES, INC.
CONSULTING ENGINEERS
SAN ANTONIO, TEXAS 78201

7/8/2010

RIALTO STUDIO
Rialto Studio, Inc.
Landscape Architecture
2425 Broadway, Suite 105
San Antonio, Texas 78215
p. 210.828.1155
f. 210.828.1399

INDEX OF DRAWINGS

SHEET NO.			SHEET TITLE
			COVER SHEET
SS 01	OF	8	INDEX OF DRAWINGS & QUANTITIES
SS 02	OF	8	SANITARY SEWER GENERAL NOTES
SS 03	OF	8	SANITARY SEWER LAYOUT PLAN
SS 04	OF	8	SANITARY SEWER PLAN & PROFILE I
SS 05	OF	8	SANITARY SEWER PLAN & PROFILE II
SS 06	OF	8	SANITARY SEWER PLAN & PROFILE III
SS 07	OF	8	TYPICAL SECTIONS SANITARY SEWER STANDARDS
SS 08	OF	8	MISCELLANEOUS DETAILS

ESTIMATED QUANTITIES

ITEM NO.	DESCRIPTION	UNIT	QUANTITY
100	MOBILIZATION	L.S.	1
101	PREPARING RIGHT OF WAY	L.S.	1
550	TRENCH EXCAVATION SAFETY PROTECTION	LF	580
848	8" PVC GRAVITY SEWER LINE, 0'-6' CUT	LF	160
848	8" PVC GRAVITY SEWER LINE, 6'-8' CUT	LF	420
852.1	SANITARY SEWER MANHOLE (0'-6')	EA	3
852.3	EXTRA DEPTH MANHOLES (>6')	VF	4
854	SANITARY SEWER LATERALS	LF	471
854A	ONE-WAY SANITARY SEWER CLEANOUT	EA	17
856.1	JACKING, BORING, OR TUNNELING 24" LINE	LF	0
856.2	8" CARRIER PIPE FOR JACKING, BORING, TUNNELING	LF	0
856.3	CASING OR LINER, 24"	LF	0
858	CONCRETE ENCASEMENT, CRADLES, SADDLES AND COLLARS	CY	1
862	ABANDONMENT OF SANITARY SEWER MAIN AND MANHOLE	LF	465
864	BYPASS PUMPING	L.S.	1
866A	SEWER MAIN TELEVISION INSPECTION (8" - 15")	LF	580
866B	PRE-CONSTRUCTION SEWER MAIN TELEVISION INSPECTION (8" - 15")	LF	550

LIST OF ABBREVIATIONS

℄	CENTERLINE
CPS	CITY PUBLIC SERVICE
C.Y.	CUBIC YARD
D.I.	DUCTILE IRON
DIA.	DIAMETER
DWG	DRAWING
EA.	EACH
EL. ELEV.	ELEVATION
GAL.	GALLON
GALV.	GALVANIZED
HORIZ.	HORIZONTAL
INV.	INVERT
IAW	IN ACCORDANCE WITH
I.P.	IRON PIN
L.F.	LINEAR FEET
L.S.	LUMP SUM
MAX.	MAXIMUM
MH	MANHOLE
MIN.	MINIMUM
MO.	MONTH
N.S.P.I.	NO SEPARATE PAY ITEM
O.C.	ON CENTER
PVC	POLYVINYL CHLORIDE
R	RADIUS
R.C.P.	REINFORCED CONCRETE PIPE
R.O.W.	RIGHT-OF-WAY
R.R.	RAILROAD
RWL	RECYCLED WATER LINE
SAWS	SAN ANTONIO WATER SYSTEM
S.F.	SQUARE FEET
S.S.	SANITARY SEWER
STA.	STATION
STD	STANDARD
S.Y.	SQUARE YARD
T.B.M.	TEMPORARY BENCH MARK
VERT.	VERTICAL
V.P.I.	VERTICAL POINT OF INTERSECTION
W/	WITH

AS BUILT/PLAN RECORD DRAWINGS

I HEREBY CERTIFY THAT THIS AS-BUILT/PLAN OF RECORD IS TRUE AND CORRECT TO THE BEST OF MY KNOWLEDGE AND WAS PREPARED UNDER MY SUPERVISION.

Chan Kuming 7-9-10

NOTE: INFORMATION FOR THESE AS-BUILT/PLAN OF RECORD DRAWINGS WAS SUPPLIED BY THE CONTRACTOR AND SAWS. MYLAR PLANS IN DIGITAL FORMAT ARE REPRESENTATIVE OF THAT INFORMATION WHICH WAS SUPPLIED.

AS BUILT/PLAN RECORD DRAWINGS 7/10/07

No.	Revision	Drawn	Approved	Date

REVISIONS

MARKET SQUARE REHABILITATION, PHASE I
SANITARY SEWER WORKS
ESTIMATED QUANTITIES
SANITARY SEWER

DEVELOPER:
CONT. BUDGET PROJ. 33
SUBMITTED
APPROVED
MAP No. 158-578
SECT. No.
DR. D.B. CK. K.W.C. JOB No. 04-5535
SHEET SS1 OF 8

STATE OF TEXAS
KUM WING CHAN
65399
REGISTERED PROFESSIONAL ENGINEER

K.M. NG & ASSOCIATES, INC.
CONSULTING ENGINEERS
SAN ANTONIO, TEXAS 78201

I:\Projects\Active\50_Cosa\501161\61ssquan.dgn
7/8/2010 1:50:16 PM naleman

RIALTO STUDIO

Rialto Studio, Inc.
Landscape Architecture
2425 Broadway, Suite 105
San Antonio, Texas 78215
p. 210.828.1155
f. 210.828.1399

SANITARY SEWER SYSTEM GENERAL NOTES

1. ALL MATERIALS AND CONSTRUCTION PROCEDURES WITHIN THE SCOPE OF THIS PROJECT SHALL BE APPROVED BY THE SAN ANTONIO WATER SYSTEM (SAWS) AND COMPLY WITH THE FOLLOWING AS APPLICABLE:

   A. CURRENT TEXAS COMMISSION ON ENVIRONMENTAL QUALITY'S DESIGN CRITERIA FOR SEWERAGE SYSTEMS [30 TAC 317.1, 30 TAC 317.2, 30 TAC 317.3 AND 30 TAC 317.13].

   B. CURRENT "SAN ANTONIO WATER SYSTEM STANDARD SPECIFICATIONS FOR CONSTRUCTION".

   C. CURRENT CITY OF SAN ANTONIO "STANDARD SPECIFICATIONS FOR PUBLIC WORKS CONSTRUCTION".

   D. CURRENT TXDOT " STANDARD SPECIFICATION FOR CONSTRUCTION OF HIGHWAYS, STREETS AND DRAINAGE".

   E. CURRENT CITY OF SAN ANTONIO "RIGHT - OF - WAY ORDINANCE AND CRITERIA MANUAL".

2. THE CONTRACTOR IS TO NOTIFY AND MAKE ARRANGEMENTS WITH THE SAWS CONSTRUCTION INSPECTION DIVISION AT 233-3500 AND THE INVOLVED HOME RESIDENTS AND/OR PROPERTY OWNERS 48 HOURS PRIOR TO EXCAVATION.

3. THE CONTRACTOR SHALL NOT PROCEED WITH ANY PIPE INSTALLATION WORK UNTIL THEY OBTAIN A COPY OF THE APPROVED G.C.P. FROM THE CONSULTANT AND HAS BEEN NOTIFIED BY SAWS CONSTRUCTION INSPECTION DIVISION TO PROCEED WITH THE WORK AND HAS ARRANGED A MEETING WITH THE INSPECTOR AND CONSULTANT FOR THE WORK REQUIREMENTS.

4. THE LOCATIONS AND DEPTHS OF EXISTING UTILITIES, INCLUDING SERVICE LATERALS, AND DRAINAGE STRUCTURES SHOWN ON THE PLANS ARE APPROXIMATE ONLY. THE CONTRACTOR SHALL VERIFY THE EXACT LOCATION AND DEPTHS OF UNDERGROUND UTILITIES AT LEAST 48 HOURS PRIOR TO CONSTRUCTION WHETHER SHOWN ON PLANS OR NOT, AND TO PROTECT THE SAME DURING CONSTRUCTION.

SAN ANTONIO WATER SYSTEM	233-2010
COSA DRAINAGE	207-2800
COSA TRAFFIC SIGNAL OPERATIONS	207-7765
TEXAS STATE WIDE ONE CALL LOCATOR	1-800-545-6005
CITY PUBLIC SERVICE	"
SOUTH WESTERN BELL	"
TIME WARNER CABLE	"
VALERO ENERGY CO.	"
BEXAR METROPOLITAN WATER DISTRICT	354-6536

5. THE CONTRACTOR SHALL BE RESPONSIBLE FOR RESTORING TO ITS ORIGINAL OR BETTER CONDITION FROM DAMAGE DONE TO EXISTING FENCES, CURBS, STREETS, DRIVEWAYS, LANDSCAPING AND ALL OTHER STRUCTURES AND DEVICES NOT SHOWN TO BE REMOVED OR MODIFIED ON THE PLAN.

6. THE CONTRACTOR SHALL AVOID CUTTING ROOTS LARGER THAN ONE-INCH IN DIAMETER WHEN EXCAVATING NEAR EXISTING TREES. EXCAVATION IN VICINITY OF TREES SHALL PROCEED WITH CAUTION. THE CONTRACTOR SHALL CONTACT THE CITY ARBORIST AT 207-8053 FOR GUIDANCE. SAWS CONSTRUCTION INSPECTOR SHALL ALSO BE NOTIFIED.

7. THE CONTRACTOR SHALL MAINTAIN SERVICE TO EXISTING SANITARY SEWERS AT ALL TIMES DURING CONSTRUCTION.

8. DUE TO FEDERAL REGULATIONS TITLE 49, PART 192.181, CITY PUBLIC SERVICE MUST MAINTAIN ACCESS TO GAS VALVES AT ALL TIMES. THE CONTRACTOR MUST PROTECT AND WORK AROUND GAS VALVES THAT ARE IN THE PROJECT AREAS.

9. ALL RESIDENTIAL SEWER SERVICE LATERALS SHALL BE EXTENDED TO THE PROPERTY LINE AND CAPPED AND SEALED.

10. ON ALL MANHOLES TO BE ABANDONED, THE RINGS AND COVERS SHALL BE SALVAGED IN ACCORDANCE WITH THE MOST CURRENT SAN ANTONIO WATER SYSTEM'S STANDARD SPECIFICATION FOR CONSTRUCTION, ITEM 101: PREPARATION OF RIGHT-OF-WAY. THE HOLE SHOULD BE BACKFILLED TO THE SATISFACTION OF THE INSPECTOR.

BLASTING

11. WHEN ALLOWABLE, BLASTING SHALL BE PERFORMED IN ACCORDANCE WITH APPROPRIATE CRITERIA ESTABLISHED BY THE NATIONAL FIRE PROTECTION ASSOCIATION [30 TAC 313.5 (C) (6)].

12. BLASTING FOR SEWER LINE EXCAVATION MUST BE DONE IN SUCH A MANNER AS TO MINIMIZE THE FRACTURING OF ROCK BEYOND THE REQUIRED EXCAVATION. THE CONTRACTOR SHALL CONSIDER THE ELEVATION OF THE EXISTING SANITARY SEWER MAIN IN RELATION TO THE BLASTING CHARGE AND THE RELATIVE DIRECTION OF EXISTING AND PROPOSED TRENCHES. BLASTING WITHIN SUCH AREAS SHALL BE ACCOMPLISHED ONLY BY QUALIFIED BLASTING CONTRACTORS WHO HOLD BLASTING LICENSES FROM A QUALIFIED AGENCY SUCH AS THE SAN ANTONIO FIRE DEPARTMENT IN BEXAR COUNTY. ANY DAMAGE TO EXISTING SANITARY SEWERS RESULTING FROM BLASTING SHALL BE REPAIRED AND RETESTED BY THE CONTRACTOR AT HIS OWN EXPENSE.

13. NO BLASTING SHALL BE PERFORMED WITHIN 75 FEET OF EXISTING UTILITIES.

14. AFTER CONSTRUCTION, TESTING WILL BE DONE BY TV CAMERA BY THE CONTRACTOR AND OBSERVED BY INSPECTOR, AND WASTEWATER ENGINEERING PERSONNEL, AS THE CAMERA IS RUN THROUGH THE LINES. ANY ABNORMALITIES, SUCH AS BROKEN PIPE OR MISALIGNED JOINTS, MUST BE REPLACED BY THE CONTRACTOR AT HIS EXPENSE. CONTRACTOR TO PROVIDE TV TAPES TO CONSTRUCTION INSPECTION FOR REVIEW PRIOR TO FINAL INSPECTION OF THE PROJECT.

EXCAVATION

15. CONTRACTOR AND/OR CONTRACTOR'S INDEPENDENTLY RETAINED EMPLOYEE OR STRUCTURAL DESIGN/GEOTECHNICAL/SAFETY/EQUIPMENT CONSULTANT, IF ANY, SHALL REVIEW THESE PLANS AND AVAILABLE GEOTECHNICAL INFORMATION AND THE ANTICIPATED INSTALLATION SITE(S) WITHIN THE PROJECT WORK AREA IN ORDER TO IMPLEMENT CONTRACTOR'S TRENCH EXCAVATION SAFETY PROTECTION SYSTEMS, PROGRAMS AND/OR PROCEDURES. THE CONTRACTOR'S IMPLEMENTATION OF THE SYSTEMS, PROGRAMS AND/OR PROCEDURES SHALL PROVIDE FOR ADEQUATE TRENCH EXCAVATION SAFETY PROTECTION THAT COMPLIES WITH AS A MINIMUM, OSHA STANDARDS FOR TRENCH EXCAVATIONS. SPECIFICALLY, CONTRACTOR AND/OR CONTRACTOR'S INDEPENDENTLY RETAINED EMPLOYEE OR SAFETY CONSULTANT SHALL IMPLEMENT A TRENCH SAFETY PROGRAM IN ACCORDANCE WITH OSHA STANDARDS GOVERNING THE PRESENCE AND ACTIVITIES OF INDIVIDUALS WORKING IN AND AROUND TRENCH EXCAVATION.

16. CONTRACTOR IS RESPONSIBLE FOR REMOVAL OF ALL WASTE MATERIALS UPON PROJECT COMPLETION. THE CONTRACTOR SHALL NOT PERMANENTLY PLACE ANY WASTE MATERIALS IN THE 100-YEAR FLOOD PLAIN WITHOUT FIRST OBTAINING AN APPROVED FLOOD PLAIN DEVELOPMENT PERMIT.

17. WATER JETTING THE BACKFILL WITHIN A STREET WILL NOT BE PERMITTED. SANITARY SEWER TRENCHES SUBJECT TO TRAFFIC SHALL CONFORM TO THE S.A.W.S. STANDARD SPECIFICATIONS FOR CONSTRUCTION, ITEM NO. 550 & 804.

WATER LINE CROSSING

18. WHERE THE MINIMUM 9 FOOT SEPARATION DISTANCE BETWEEN SEWER LINES AND WATER LINES/MAINS CANNOT BE MAINTAINED, THE INSTALLATION OF SEWER LINES SHALL BE IN STRICT ACCORDANCE WITH THE TEXAS NATURAL RESOURCE CONSERVATION COMMISSION'S RULES (30 TAC 317.13 APPENDIX E).

EROSION AND SEDIMENTATION CONTROL

19. THE TEXAS COMMISSION ON ENVIRONMENTAL QUALITY AND ENVIRONMENTAL PROTECTION AGENCY (EPA) REQUIRE EROSION AND SEDIMENTATION CONTROL FOR CONSTRUCTION OF SEWER COLLECTION SYSTEMS. DEVELOPER OR AUTHORIZED REPRESENTATIVE SHALL PROVIDE EROSION AND SEDIMENTATION CONTROL AS NOTES ON THE PROJECT'S PLAN AND PROFILE SHEETS.

20. ALL TEMPORARY EROSION AND SEDIMENTATION CONTROLS SHALL BE REMOVED BY THE CONTRACTOR AT FINAL ACCEPTANCE OF THE PROJECT BY THE SAN ANTONIO WATER SYSTEM.

SUPPLEMENTARY

21. NO EXTRA-PAYMENT SHALL BE ALLOWED FOR WORK CALLED FOR ON THE PLANS BUT NOT INCLUDED ON THE BID SCHEDULE. THIS INCIDENTAL WORK WILL BE REQUIRED AND SHALL BE INCLUDED UNDER THE PAY ITEM TO WHICH IT RELATES.

22. THE DEVELOPER DEDICATES THE SANITARY SEWER MAINS UPON COMPLETION BY THE DEVELOPER AND ACCEPTANCE BY THE SAN ANTONIO WATER SYSTEM. THE SAN ANTONIO WATER SYSTEM WILL OWN AND MAINTAIN SAID SANITARY SEWER MAINS WHICH ARE LOCATED WITHIN THIS PARTICULAR SUBDIVISION. (AS APPLICABLE)

23. THE DEVELOPER WILL BE RESPONSIBLE FOR THE LIFT STATION MAINTENANCE FEE IN EFFECT AT THE TIME OF CERTIFICATION. THE CURRENT MAINTENANCE FEE PER LIFT STATION WILL BE COLLECTED PRIOR TO PLAT RECORDATION

24. ALL PVC SEWER PIPE WITH OVER 14 FEET OF COVER SHALL BE EXTRA STRENGTH PIPE, MINIMUM STIFFNESS OF 115 PSI.

25. WORK COMPLETED BY THE CONTRACTOR WHICH HAS NOT RECEIVED A WORK ORDER OR THE NOTICE TO PROCEED WITH THE SAN ANTONIO WATER SYSTEM CONSTRUCTION INSPECTION DIVISION WILL BE SUBJECT TO REMOVAL AND REPLACEMENT BY AND AT THE EXPENSE OF THE CONTRACTOR.

GENERAL NOTES

1. BIDDERS ARE HEREBY NOTIFIED TO MAKE SUCH SUBSURFACE INVESTIGATIONS AS THEY DEEM NECESSARY. NO ADDITIONAL PAYMENT SHALL BE MADE FOR ROCK, SAND, GRAVEL, OR OTHER UNSTABLE CONDITIONS ENCOUNTERED IN TRENCH EXCAVATION OR OTHER EXCAVATION.

2. WHERE REMOVAL OF CONCRETE SLABS, SHOWN OR NOT SHOWN ON THE PLANS, IS REQUIRED, THE WORK PERFORMED WILL BE DONE AND PAID FOR AS SUBSIDIARY WORK UNDER ITEM NO. 101, PREPARATION OF RIGHT-OF-WAY.

3. ANY CONCRETE STRUCTURES, SLABS, INTERSECTIONS, ABANDONED INLETS, CHUTES, CULVERTS, WINGWALLS, RETAINING WALLS, CHANNELS, STONE RETAINING WALLS, WOODEN RETAINING WALLS, OR ABANDONED UTILITY LINES ENCOUNTERED DURING EXCAVATION SHALL BE UNCLASSIFIED EXCAVATION UNLESS A SPECIFIC PAY ITEM IS ASSIGNED TO IT AND IS SHOWN ON THE PLANS.

4. THE CONTRACTOR SHALL BE REQUIRED TO PROTECT ALL SANITARY SEWER SERVICE LINES WITHIN THE R.O.W. TO ENSURE THAT THESE LINES WILL NOT BE DAMAGED BY CONSTRUCTION OPERATIONS. ANY ADJUSTMENTS NECESSARY SHALL BE THE RESPONSIBILITY OF THE CONTRACTOR.

5. THE CONTRACTOR SHALL PROVIDE ACCESS FOR THE DELIVERY OF MAIL BY THE U.S. POSTAL SERVICE.

6. THE CONTRACTOR SHALL PROVIDE ACCESS TO RESIDENCES AND BUSINESSES.

7. WHENEVER POWER POLES ARE ADJACENT TO PROPOSED EXCAVATIONS, THE CONTRACTOR SHALL PROVIDE PROPER SHORING OR OTHER SUITABLE SUPPORT DURING THE EXCAVATION. METHODS MUST BE APPROVED BY THE RESPECTIVE UTILITY COMPANY MAINTENANCE DEPARTMENT. NO SEPERATE MEASUREMENT OR PAYMENT SHALL BE MADE FOR THE WORK.

8. ALL POLLUTION PREVENTION MEASURES SHALL BE INSPECTED BY THE CONTRACTOR OR HIS REPRESENTATIVE AT LEAST ONCE EVERY 7 DAYS AND WITHIN 24 HOURS FOLLOWING ANY STORM EVENT OF 0.5 INCH OR GREATER.

9. THE SAWS INSPECTOR SHALL REQUEST MODIFICATIONS IN PLANS AND SPECIFICATIONS AS NECESSARY TO CORRECT POLLUTION PREVENTION MEASURE DEFICIENCIES DUE TO CONTRACTOR'S NEGLIGENCE. HE WILL ALSO INFORM THE THE CONTRACTOR OF ANY MAINTENANCE DEFICIENCIES TO BE CORRECTED BY THE CONTRACTOR.

10. ALL VEHICLES DEPARTING THE CONSTRUCTION SITE SHALL BE RELATIVELY CLEAN OF DEBRIS TO PREVENT TRACKING DIRT ONTO CITY STREETS AND COUNTY ROADS.

11. THE OWNER AND THE CONTRACTOR SHALL SUBMIT THE NOTICE OF INTENT (NOI) FOR STORM WATER DISCHARGES TO THE UNITED STATES ENVIRONMENTAL PROTECTION AGENCY FOR APPROVAL AT LEAST TWO (2) DAYS PRIOR TO CONSTRUCTION.

12 THE OWNER AND THE PRIME CONTRACTOR AND HIS SUBCONTRACTOR(S) SHALL SIGN THE CERTIFICATION OF COMPLIANCE TO THE TERMS AND CONDITIONS OF THE GENERAL NATIONAL POLLUTANT DISCHARGE ELIMINATION SYSTEM (NPDES) PERMIT.

13. UPON COMPLETION OF ALL WORK IN ACCORDANCE WITH THE PROJECT REQUIREMENTS, THE OWNER AND THE CONTRACTOR SHALL SUBMIT THE NOTICE OF TERMINATION (NOT) FOR STORM WATER DISCHARGES TO THE UNITED STATES ENVIRONMENTAL PROTECTION AGENCY.

14. IT IS THE CONTRACTOR'S RESPONSIBILITY TO INSTALL A SAFETY FENCE AROUND THE CONSTRUCTION AREAS TO PROTECT THE PUBLIC FROM ENTERING THE CONSTRUCTION AREAS. SAFETY FENCES SHALL BE A MINIMUM OF 6 FEET HIGH AND SHALL BE MAINTAINED IN GOOD CONDITION BY THE CONTRACTOR THROUGHOUT THE PROJECT DURATION. SAFETY FENCES AND GATES SHALL BE REMOVED AND DISPOSED OFF SITE BY THE CONTRACTOR PRIOR TO ACCEPTANCE OF WORK. REMOVAL OF SAFETY AND TEMPORARY FENCES AND GATES SHALL BE SUBSIDIARY TO THE SANITARY SEWER WORKS.

15. THE CONTRACTOR SHALL LAY NO CLAIM TO ANY ARTIFACTS ON THE PROJECT AREA EXCEPT WASTE MATERIAL GENERATED BY THE CONTRACTOR.

16. WHEN SEWER LINES ARE INSTALLED IN THE VICINITY OF WATER MAINS, SUCH INSTALLATION SHALL BE IN STRICT ACCORDANCE WITH THE TEXAS COMMISSION ON ENVIRONMENTAL QUALITY (TCEQ) CHAPTER 317, PARAGRAPH 317.2 (a) (7) (NO SEPARATE PAY ITEM).

17. THE CONTRACTOR SHALL BE RESPONSIBLE FOR DISCONNECTING EACH EXISTING SERVICE LINE FROM THE EXISTING MAIN AND RECONNECTING THE SERVICE TO THE NEW SEWER MAIN WHERE APPLICABLE. THE CONTRACTOR SHALL BE RESPONSIBLE FOR MAINTAINING CONTINOUS SERVICE (NO SEPARATE PAY ITEM).

18. THE CONTRACTOR SHALL NOT PLACE ANY WASTE MATERIALS IN THE 100-YEAR FLOOD PLAIN WITHOUT FIRST OBTAINING AN APPROVED FLOOD PLAIN PERMIT.

19. THE CONTRACTOR IS RESPONSIBLE FOR ENSURING THAT NO OVERFLOWS OR SPILLAGE OF SEWAGE OCCURS. SHOULD THIS OCCUR, THE CONTRACTOR SHALL:

   A. IDENTIFY THE SOURCE OF THE SPILL AND ATTEMPT TO ELIMINATE ANY ADDITIONAL SPILLAGE. NOTIFY CONSTRUCTION INSPECTIONS.

   B. CONTAIN THE SPILL IN PLACE AND PREVENT CONTAMINATION OF STREAMS.

   C. CLEAN UP THE SPILL AND DISPOSE OF CONTAMINATED MATERIALS.

   D. DISINFECT THE AREA OF THE SPILL WITH A MIXTURE OF HTH CHLORINE AND WATER.

   E. IDENTIFY AND TRAIN PERSONNEL RESPONSIBLE FOR SPILL PREVENTION AND CONTROL.

NO SEPARATE MEASUREMENT OR PAYMENT SHALL BE MADE FOR THIS WORK. ALL WORK SHALL BE DONE ACCORDING TO GUIDELINES SET BY THE TEXAS COMMISSION ON ENVIRONMENTAL QUALITY (TCEQ) AND THE SAN ANTONIO WATER SYSTEM.

20. SERVICE LATERAL CONNECTIONS:

   A. THE EXACT LOCATION AND ELEVATION OF THE SERVICE LATERALS AND MANHOLES SHALL BE FIELD VERIFIED BY THE CONTRACTOR (NSPI).

   B. A MINIMUM OF 3 FEET OF COVER IS TO BE MAINTAINED OVER THE SANITARY SEWER LATERALS AT SUBGRADE.

   C. ALL SEWER LATERAL SERVICES FOR FUTURE CONNECTIONS AS INDENTIFIED ON PLAN AND PROFILES, SHALL BE CAPPED AND SEALED.

   D. THE CONTRACTOR SHALL BE RESPONSIBLE FOR DISCONNECTING EACH EXISTING SERVICE LINE FROM THE EXISTING MAIN AND RE-CONNECTING THE SERVICE TO THE NEW SERVICE MAIN. THE CONTRACTOR SHALL BE RESPONSIBLE FOR MAINTAINING CONTINUOUS SERVICE (NO SEPARATE PAY ITEM).

   E. LATERALS SHALL BE CONSTRUCTED TO SERVE ALL EXISTING HOUSES AND VACANT LOTS.

21. ALL MANHOLES, RINGS, AND COVERS SHALL BE WATERTIGHT.
THE GENERAL SPECIFICATIONS PRIOR TO ACCEPTANCE BY THE SAN ANTONIO WATER SYSTEM.

22. ALL MAINS MUST PASS HYDROSTATIC TESTING IN ACCORDANCE WITH ITEM NO. 841 IN

23. ALL MANHOLES REMAINING IN SERVICE SHALL BE FILLED WITH CONCRETE (CLASS "A") TO THE ADJUSTED INVERT TO MATCH THE NEWLY CONSTRUCTED SEWER LINE AS SHOWN ON THE PLANS (NO SEPARATE PAY ITEM).

24. THE CONTRACTOR SHALL PROTECT THE EXISTING SANITARY SEWER UNTIL ABANDONED OR REMOVED.

25. THE MINIMUM RADIUS OF CURVATURE FOR ANY PIPE SHALL BE EITHER 200 FEET OR THE MANUFACTURER'S RECOMMENDATION, WHICHEVER IS GREATER. THIS REQUIREMENT IS IN NO WAY INTENDED TO RELIEVE THE CONTRACTOR OF HIS RESPONSIBILITIES TO SUCCESSFULLY PASS THE AIR TESTING REQUIREMENTS.

26. A MINIMUM OF 3 FEET OF COVER IS TO BE MAINTAINED OVER THE SANITARY SEWER MAIN AND SERVICE LATERALS AT SUBGRADE.

27. A DEFLECTION TEST SHALL BE PERFORMED ON ALL FLEXIBLE PIPE. THE TEST SHALL BE CONDUCTED AFTER THE INITIAL BACKFILL HAS BEEN IN PLACE AT LEAST 30 DAYS.

28. CONCRETE ENCASEMENT, WHERE REQUIRED, SHALL BE PLACED FOR FULL WIDTH OF THE TRENCH TO A PLANE SIX (6) INCHES ABOVE THE TOP OF THE PIPE. NO DIRECT PAYMENT SHALL BE MADE FOR CONCRETE ENCASEMENT EXTENDING FARTHER THAN SIX (6) INCHES IN A HORIZONTAL PLANE OR VERTICAL PLANE FROM THE PIPE, REGARDLESS OF THE AMOUNT PLACED.

29. ALL SOLIDS OR SEMI-SOLIDS RESULTING FROM THE CONSTRUCTION OF THIS WORK SHALL BE REMOVED FROM THE SITE AT LEAST ONCE EACH WORK DAY AND DISPOSED OF AT NO ADDITIONAL COST TO THE SAWS. NO STORAGE OF SOLIDS/SLUDGE WILL BE ALLOWED. IT IS THE RESPONSIBILITY OF THE CONTRACTOR TO SECURE A LEGAL DUMP SITE FOR THE DISPOSAL OF THIS MATERIAL. COST FOR THIS ITEM SHALL BE INCLUDED IN THE PRICE BID FOR SANITARY SEWER PIPE OR STRUCTURE.

30. VERTICAL STACKS REQUIRED FOR SANITARY SEWER SERVICE LATERALS ARE NOT SHOWN ON THE PLANS AND SHALL BE INSTALLED WHERE DIRECTED BY THE INSPECTOR.

31. THE CONTRACTOR SHALL BE RESPONSIBLE FOR MAINTAINING CONTINOUS FLOW AND RE-CONNECTING OR CONNECTING ALL EXISTING OR NEW SERVICES AS PIPE IS BEING LAID. LATERALS SHALL BE CONSTRUCTED TO SERVE ALL EXISTING HOUSES AND ALL VACANT LOTS.

AS BUILT/PLAN RECORD DRAWINGS

I HEREBY CERTIFY THAT THIS AS-BUILT/PLAN OF RECORD IS TRUE AND CORRECT TO THE BEST OF MY KNOWLEDGE AND WAS PREPARED UNDER MY SUPERVISION.

7-9-10

NOTE: INFORMATION FOR THESE AS-BUILT/PLAN OF RECORD DRAWINGS WAS SUPPLIED BY THE CONTRACTOR AND SAWS. MYLAR PLANS IN DIGITAL FORMAT ARE REPRESENTATIVE OF THAT INFORMATION WHICH WAS SUPPLIED.

K.M. NG & ASSOCIATES, INC.
CONSULTING ENGINEERS
SAN ANTONIO, TEXAS 78201

STATE OF TEXAS
KUM WING CHAN
65399
REGISTERED
PROFESSIONAL ENGINEER

	AS BUILT/PLAN RECORD DRAWINGS			7/10/07
No.	Revision	Drawn	Approved	Date

REVISIONS

MARKET SQUARE REHABILITATION, PHASE I
SANITARY SEWER WORKS
SANITARY SEWER
GENERAL NOTES

DEVELOPER:
CONT. BUDGET PROJ. 33
SUBMITTED
APPROVED
MAP No. 158-578
SECT. No.
DR. D.B. CK. K.W.C. JOB No. 04-5535
SHEET SS2 OF 8

7/8/2010 1:50:20 PM naleman

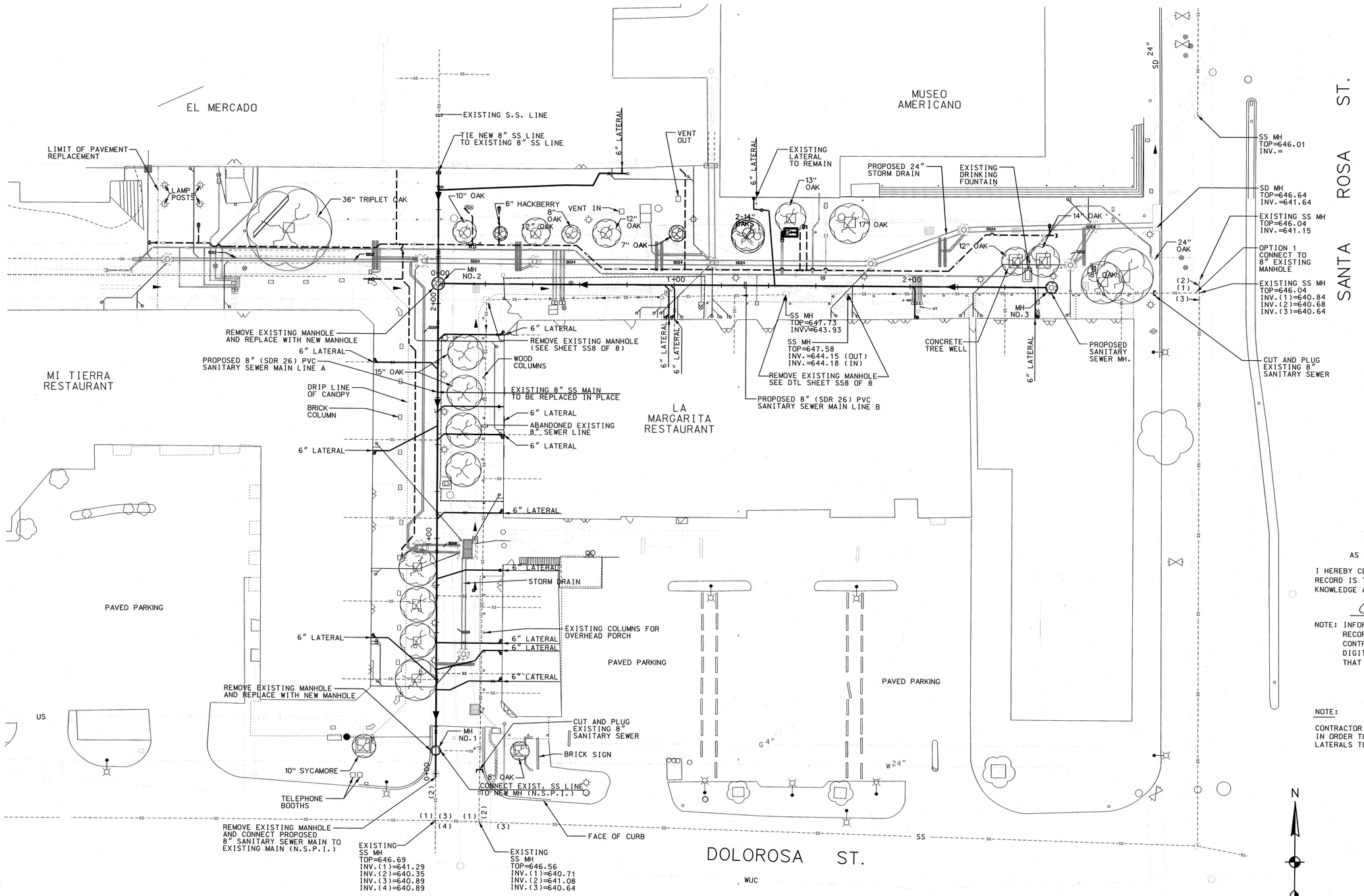

1 SS3 SANITARY SEWER PLAN SCALE:-1"-20'

20 0 20 40
SCALE OF FEET

AS BUILT/PLAN RECORD DRAWINGS

I HEREBY CERTIFY THAT THIS AS-BUILT/PLAN OF RECORD IS TRUE AND CORRECT TO THE BEST OF MY KNOWLEDGE AND WAS PREPARED UNDER MY SUPERVISION.

7-9-10

NOTE: INFORMATION FOR THESE AS-BUILT/PLAN OF RECORD DRAWINGS WAS SUPPLIED BY THE CONTRACTOR AND SAWS. MYLAR PLANS IN DIGITAL FORMAT ARE REPRESENTATIVE OF THAT INFORMATION WHICH WAS SUPPLIED.

NOTE:

CONTRACTOR SHALL TELEVISE EXISTING SEWER LINES IN ORDER TO DETERMINE LOCATION AND NUMBER OF LATERALS TO BE REPLACED.

RIALTO STUDIO

Rialto Studio, Inc.
Landscape Architecture
2425 Broadway, Suite 105
San Antonio, Texas 78215
p. 210.828.1155
f. 210.828.1399

No.	Revision	Drawn	Approved	Date
	AS BUILT/PLAN RECORD DRAWINGS			7/10/07

REVISIONS

MARKET SQUARE REHABILITATION, PHASE I
SANITARY SEWER WORKS
SANITARY SEWER LAYOUT PLAN

DEVELOPER:
CONT. BUDGET PROJ. 33
SUBMITTED
APPROVED
MAP No. 158-578
SECT. No.
DR. D.B. CK. K.W.C. JOB No. 04-5535
SHEET SS3 OF 8

K.M. NG & ASSOCIATES, INC.
CONSULTING ENGINEERS
SAN ANTONIO, TEXAS 78201

STATE OF TEXAS
KUM WING CHAN
65399
REGISTERED PROFESSIONAL ENGINEER

I:\Projects\Active\50_Cosa\501161\61ss301.dgn
7/8/2010 1:50:24 PM naleman

TRENCH EXCAVATION SAFETY PROTECTION

CONTRACTOR AND/OR CONTRACTOR'S INDEPENDENTLY RETAINED EMPLOYEE OR STRUCTURAL DESIGN/GEOTECHNICAL/SAFETY/EQUIPMENT CONSULTANT, IF ANY, SHALL REVIEW THESE PLANS AND AVAILABLE GEOTECHNICAL INFORMATION AND THE ANTICIPATED INSTALLATION SITE(S) WITHIN THE PROJECT WORK AREA IN ORDER TO IMPLEMENT CONTRACTOR'S TRENCH EXCAVATION SAFETY PROTECTION SYSTEMS, PROGRAMS, AND/OR PROCEDURES FOR THE PROJECT DESCRIBED IN THE CONTRACT DOCUMENTS. THE CONTRACTOR'S IMPLEMENTATION OF THESE SYSTEMS, PROGRAMS AND/OR PROCEDURES SHALL PROVIDE FOR ADEQUATE TRENCH EXCAVATION SAFETY PROTECTION THAT COMPLY WITH AS A MINIMUM, OSHA STANDARDS FOR TRENCH EXCAVATIONS. SPECIFICALLY CONTRACTOR AND/OR CONTRACTOR'S INDEPENDENTLY RETAINED EMPLOYEE OR SAFETY CONSULTANT SHALL IMPLEMENT A TRENCH SAFETY PROGRAM IN ACCORDANCE WITH OSHA STANDARDS GOVERNING THE PRESENCE AND ACTIVITIES OF INDIVIDUALS WORKING IN AND AROUND TRENCH EXCAVATION.

SAN ANTONIO WATER SYSTEM NOTE:

LOCATION AND DEPTH OF EXISTING WATER MAINS AND SERVICES SHOWN ON THE PLANS ARE APPROXIMATE ONLY. ACTUAL LOCATIONS AND DEPTHS MUST BE VERIFIED BY THE CONTRACTOR 48 HOURS PRIOR TO BEGINNING CONSTRUCTION BY CALLING THE SAWS WATER LINE LOCATOR AT 233-2010. THE CONTRACTOR SHOULD EXERCISE EXTREME CAUTION WHEN WORKING NEAR EXISTING WATER FACILITIES, AND SHOULD THEY BE DAMAGED DURING CONSTRUCTION OPERATIONS, THE CONTRACTOR WILL BE REQUIRED TO REIMBURSE THE SAN ANTONIO WATER SYSTEM FOR THE TOTAL COST TO REPAIR OR REPLACE THE DAMAGED FACILITIES.

CITY PUBLIC SERVICE NOTES:

1. CALL THE TEXAS-WIDE ONE CALL LOCATOR AT 1-800-344-8377, 48 HOURS BEFORE BEGINNING ANY EXCAVATION.
2. DUE TO FEDERAL REGULATION TITLE 49, PART 192.181, CPS MUST MAINTAIN ACCESS TO GAS VALVES AT ALL TIMES. THE CONTRACTOR MUST PROTECT AND WORK AROUND ANY GAS VALVES THAT ARE IN THE PROJECT AREA.
3. THE CONTRACTOR SHALL BE RESPONSIBLE FOR PROTECTING CPS OVERHEAD AND UNDERGROUND ELECTRIC FACILITIES IF ADJACENT TO WORK AREAS.
4. THE CONTRACTOR IS RESPONSIBLE FOR MAINTAINING AND PROTECTING THE INTEGRITY OF THE POWER POLES AND LIGHT STANDARDS DURING CONSTRUCTION. REFER TO WORK CLEARANCE ZONES FOR CPS UTILITIES DRAWING FOR FUTHER DETAILS.

TIME WARNER CABLE NOTE:

CONTRACTOR TO CONTACT THE TEXAS-WIDE ONE CALL LOCATOR AT 1-800-344-8377, 48 HOURS PRIOR TO EXCAVATION. CONTRACTOR IS RESPONSIBLE FOR PROTECTING AND SUPPORTING CABLE TV PLANT DURING CONSTRUCTION.

TREE PRESERVATION NOTE:

ALL TREES WITHIN THE R.O.W. SHALL BE PRESERVED OR REMOVED IN ACCORDANCE WITH THE REQUIREMENTS SHOWN ON THE TREE PRESERVATION PLANS INCLUDED AS PART OF THE DRAWING SET.

RIALTO STUDIO
Rialto Studio, Inc.
Landscape Architecture
2425 Broadway, Suite 105
San Antonio, Texas 78215
p. 210.828.1555
f. 210.828.1599

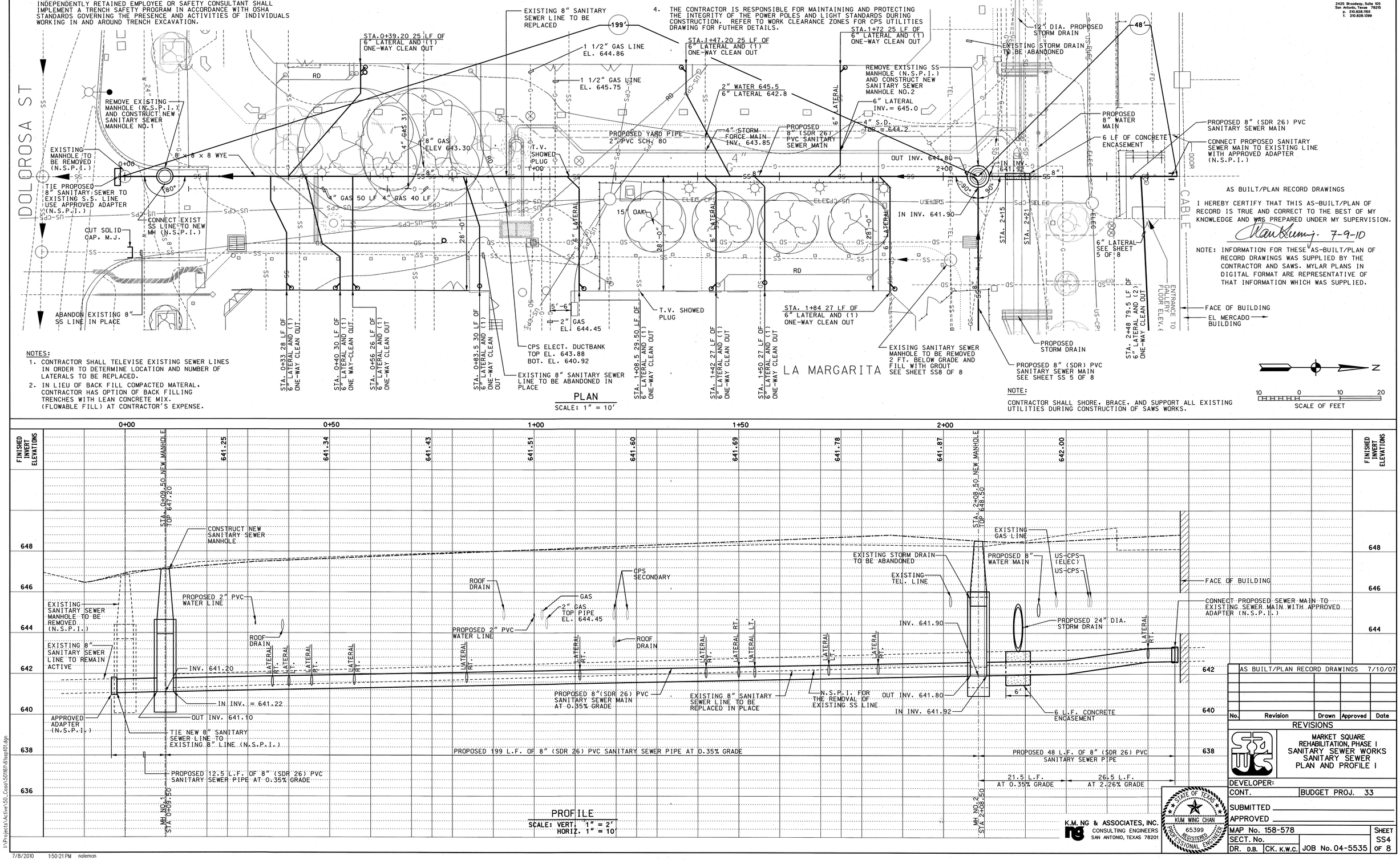

NOTES:

1. CONTRACTOR SHALL TELEVISE EXISTING SEWER LINES IN ORDER TO DETERMINE LOCATION AND NUMBER OF LATERALS TO BE REPLACED.
2. IN LIEU OF BACK FILL COMPACTED MATERAL, CONTRACTOR HAS OPTION OF BACK FILLING TRENCHES WITH LEAN CONCRETE MIX. (FLOWABLE FILL) AT CONTRACTOR'S EXPENSE.

AS BUILT/PLAN RECORD DRAWINGS

I HEREBY CERTIFY THAT THIS AS-BUILT/PLAN OF RECORD IS TRUE AND CORRECT TO THE BEST OF MY KNOWLEDGE AND WAS PREPARED UNDER MY SUPERVISION.

7-9-10

NOTE: INFORMATION FOR THESE AS-BUILT/PLAN OF RECORD DRAWINGS WAS SUPPLIED BY THE CONTRACTOR AND SAWS. MYLAR PLANS IN DIGITAL FORMAT ARE REPRESENTATIVE OF THAT INFORMATION WHICH WAS SUPPLIED.

NOTE:

CONTRACTOR SHALL SHORE, BRACE, AND SUPPORT ALL EXISTING UTILITIES DURING CONSTRUCTION OF SAWS WORKS.

PROFILE
SCALE: VERT. 1" = 2'
HORIZ. 1" = 10'

No.	Revision	Drawn	Approved	Date
	AS BUILT/PLAN RECORD DRAWINGS			7/10/07

REVISIONS

MARKET SQUARE REHABILITATION, PHASE I
SANITARY SEWER WORKS
SANITARY SEWER PLAN AND PROFILE I

DEVELOPER:

CONT. | BUDGET PROJ. 33

SUBMITTED

APPROVED

MAP No. 158-578 | SHEET SS4

SECT. No. | OF 8

DR. D.B. | CK. K.W.C. | JOB No. 04-5535

K.M. NG & ASSOCIATES, INC.
CONSULTING ENGINEERS
SAN ANTONIO, TEXAS 78201

STATE OF TEXAS
KUM WING CHAN
65399
REGISTERED PROFESSIONAL ENGINEER

I:\Projects\Active\50_Cosa\50116\t6\sspl01.dgn
7/8/2010 1:50:21 PM naleman

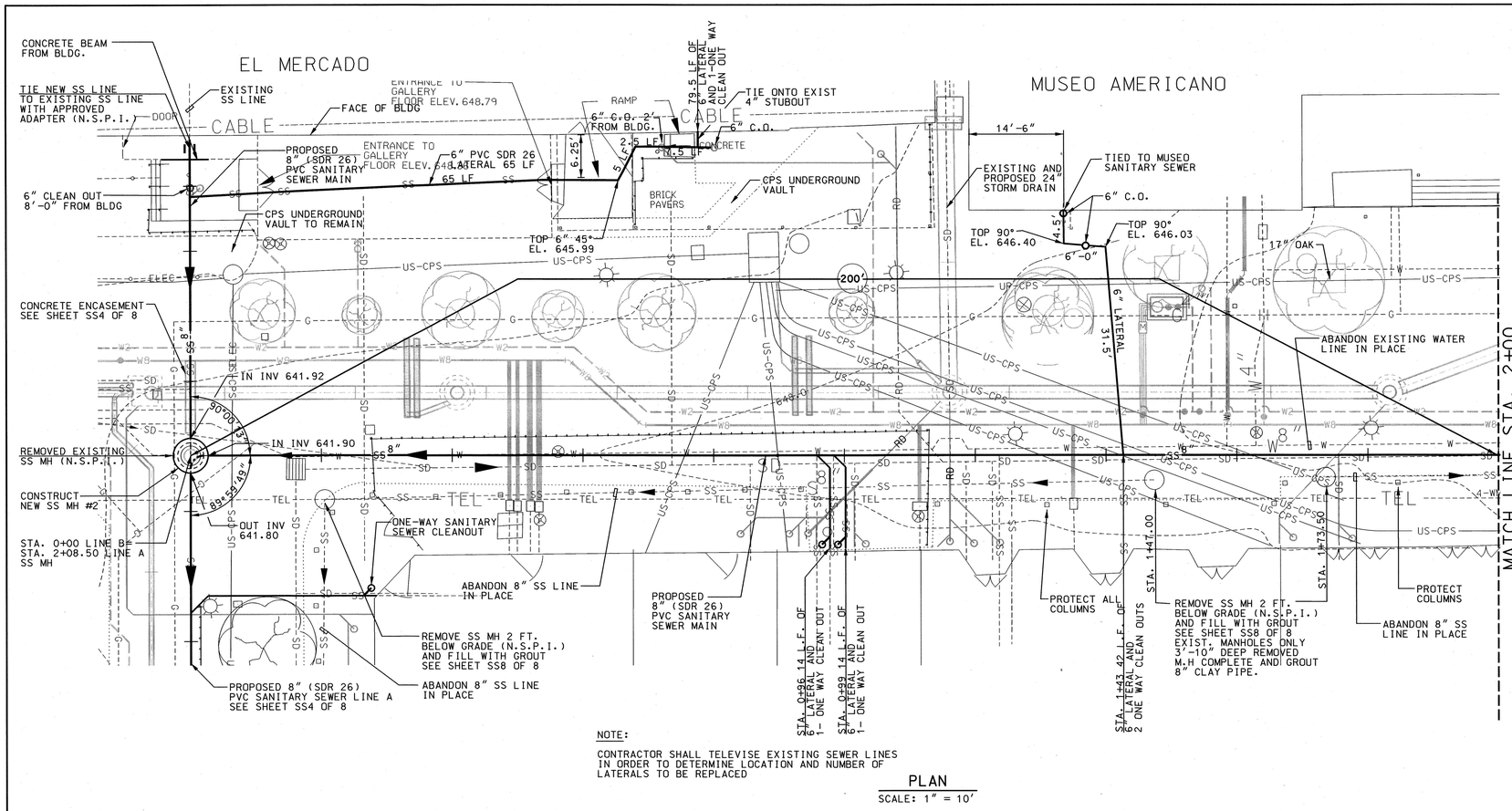

NOTE:

CONTRACTOR SHALL TELEVISE EXISTING SEWER LINES IN ORDER TO DETERMINE LOCATION AND NUMBER OF LATERALS TO BE REPLACED

PLAN

SCALE: 1" = 10'

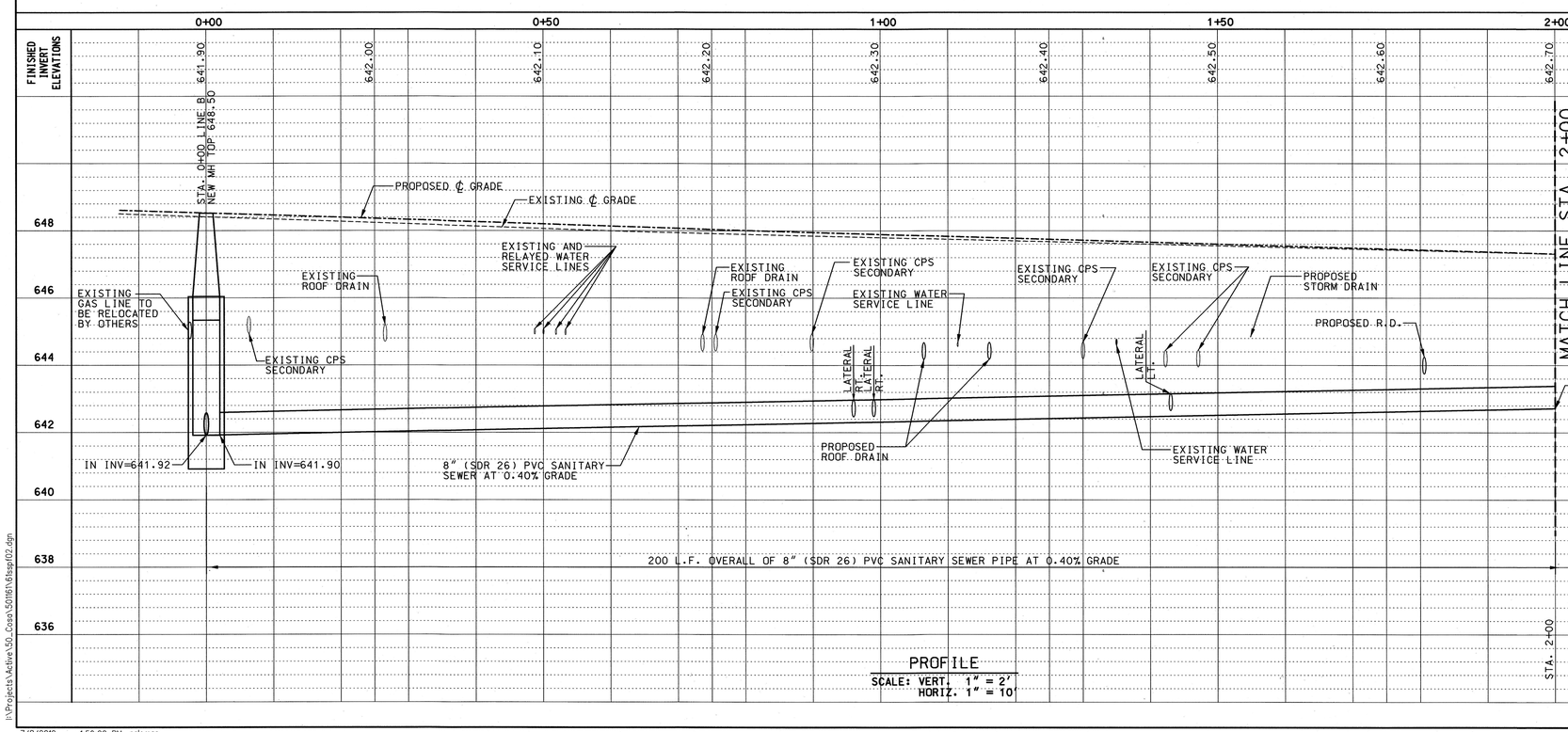

PROFILE

SCALE: VERT. 1" = 2'
HORIZ. 1" = 10'

TRENCH EXCAVATION SAFETY PROTECTION

CONTRACTOR AND/OR CONTRACTOR'S INDEPENDENTLY RETAINED EMPLOYEE OR STRUCTURAL DESIGN/GEOTECHNICAL/SAFETY/EQUIPMENT CONSULTANT, IF ANY, SHALL REVIEW THESE PLANS AND AVAILABLE GEOTECHNICAL INFORMATION AND THE ANTICIPATED INSTALLATION SITE(S) WITHIN THE PROJECT WORK AREA IN ORDER TO IMPLEMENT CONTRACTOR'S TRENCH EXCAVATION SAFETY PROTECTION SYSTEMS, PROGRAMS, AND/OR PROCEDURES FOR THE PROJECT DESCRIBED IN THE CONTRACT DOCUMENTS. THE CONTRACTOR'S IMPLEMENTATION OF THESE SYSTEMS, PROGRAMS AND/OR PROCEDURES SHALL PROVIDE FOR ADEQUATE TRENCH EXCAVATION SAFETY PROTECTION THAT COMPLY WITH AS A MINIMUM, OSHA STANDARDS FOR TRENCH EXCAVATIONS. SPECIFICALLY CONTRACTOR AND/OR CONTRACTOR'S INDEPENDENTLY RETAINED EMPLOYEE OR SAFETY CONSULTANT SHALL IMPLEMENT A TRENCH SAFETY PROGRAM IN ACCORDANCE WITH OSHA STANDARDS GOVERNING THE PRESENCE AND ACTIVITIES OF INDIVIDUALS WORKING IN AND AROUND TRENCH EXCAVATION.

SAN ANTONIO WATER SYSTEM NOTE:

LOCATION AND DEPTH OF EXISTING WATER MAINS AND SERVICES SHOWN ON THE PLANS ARE APPROXIMATE ONLY. ACTUAL LOCATIONS AND DEPTHS MUST BE VERIFIED BY THE CONTRACTOR 48 HOURS PRIOR TO BEGINNING CONSTRUCTION BY CALLING THE SAWS WATER LINE LOCATOR AT 233-2010. THE CONTRACTOR SHOULD EXERCISE EXTREME CAUTION WHEN WORKING NEAR EXISTING WATER FACILITIES, AND SHOULD THEY BE DAMAGED DURING CONSTRUCTION OPERATIONS, THE CONTRACTOR WILL BE REQUIRED TO REIMBURSE THE SAN ANTONIO WATER SYSTEM FOR THE TOTAL COST TO REPAIR OR REPLACE THE DAMAGED FACILITIES.

SBC SOUTHWESTERN BELL TELEPHONE COMPANY NOTE:

THE EXISTENCE AND LOCATION OF UNDERGROUND CABLE INDICATED ON THE PLANS ARE TAKEN FROM THE BEST RECORDS AVAILABLE AND ARE NOT GUARANTEED TO BE ACCURATE. CONTRACTOR TO CONTACT THE TELEPHONE COMPANY CABLE LOCATOR 48 HOURS PRIOR TO EXCAVATION AT 1-800-344-8377. CONTRACTOR TO PROTECT AND SUPPORT TELEPHONE COMPANY PLANT DURING CONSTRUCTION.

CITY PUBLIC SERVICE NOTES:

1. CALL THE TEXAS-WIDE ONE CALL LOCATOR AT 1-800-344-8377, 48 HOURS BEFORE BEGINNING ANY EXCAVATION.
2. DUE TO FEDERAL REGULATION TITLE 49, PART 192.181, CPS MUST MAINTAIN ACCESS TO GAS VALVES AT ALL TIMES. THE CONTRACTOR MUST PROTECT AND WORK AROUND ANY GAS VALVES THAT ARE IN THE PROJECT AREA.
3. THE CONTRACTOR SHALL BE RESPONSIBLE FOR PROTECTING CPS OVERHEAD AND UNDERGROUND ELECTRIC FACILITIES IF ADJACENT TO WORK AREAS.
4. THE CONTRACTOR IS RESPONSIBLE FOR MAINTAINING AND PROTECTING THE INTEGRITY OF THE POWER POLES AND LIGHT STANDARDS DURING CONSTRUCTION. REFER TO WORK CLEARANCE ZONES FOR CPS UTILITIES DRAWING FOR FUTHER DETAILS.

TIME WARNER CABLE NOTE:

CONTRACTOR TO CONTACT THE TEXAS-WIDE ONE CALL LOCATOR AT 1-800-344-8377. 48 HOURS PRIOR TO EXCAVATION. CONTRACTOR IS RESPONSIBLE FOR PROTECTING AND SUPPORTING CABLE TV PLANT DURING CONSTRUCTION.

TREE PRESERVATION NOTE:

ALL TREES WITHIN THE R.O.W. SHALL BE PRESERVED OR REMOVED IN ACCORDANCE WITH THE REQUIREMENTS SHOWN ON THE TREE PRESERVATION PLANS INCLUDED AS PART OF THE DRAWING SET.

AS BUILT/PLAN RECORD DRAWINGS

I HEREBY CERTIFY THAT THIS AS-BUILT/PLAN OF RECORD IS TRUE AND CORRECT TO THE BEST OF MY KNOWLEDGE AND WAS PREPARED UNDER MY SUPERVISION.

7-9-10

NOTE: INFORMATION FOR THESE AS-BUILT/PLAN OF RECORD DRAWINGS WAS SUPPLIED BY THE CONTRACTOR AND SAWS. MYLAR PLANS IN DIGITAL FORMAT ARE REPRESENTATIVE OF THAT INFORMATION WHICH WAS SUPPLIED.

No.	Revision	Drawn	Approved	Date
	AS BUILT/PLAN RECORD DRAWINGS			7/10/07

REVISIONS

MARKET SQUARE REHABILITATION, PHASE I
SANITARY SEWER WORKS
SANITARY SEWER
PLAN & PROFILE II

DEVELOPER:

CONT. | BUDGET PROJ. 33

SUBMITTED

APPROVED

MAP No. 158-578 | SHEET SS5 OF 8

SECT. No.

DR. D.B. | CK. K.W.C. | JOB No. 04-5535

STATE OF TEXAS
KUM WING CHAN
65399
REGISTERED PROFESSIONAL ENGINEER

K.M. NG & ASSOCIATES, INC.
CONSULTING ENGINEERS
SAN ANTONIO, TEXAS 78201

RIALTO STUDIO

Rialto Studio, Inc.
Landscape Architecture
2425 Broadway, Suite 105
San Antonio, Texas 78215
p. 210.828.1155
f. 210.828.1399

i:\Projects\Active\50_Cosa\50161\65ssp102.dgn
7/8/2010 1:50:22 PM naleman

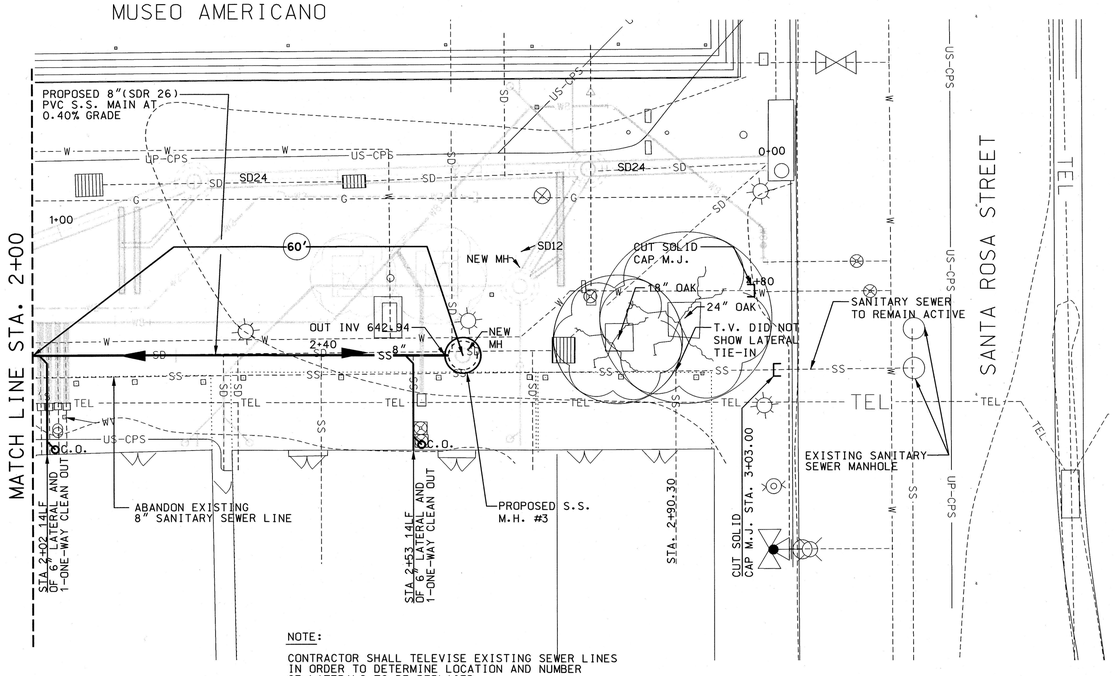

NOTE:

CONTRACTOR SHALL TELEVISE EXISTING SEWER LINES IN ORDER TO DETERMINE LOCATION AND NUMBER OF LATERALS TO BE REPLACED.

CONTRACTOR SHALL TRENCH ALONG A LINE 4'FROM FACE OF BUILDING TO LOCATE ALL EXISTING SANITARY SEWER LATERALS FOR TIE-IN.

PLAN

SCALE: 1" = 10'

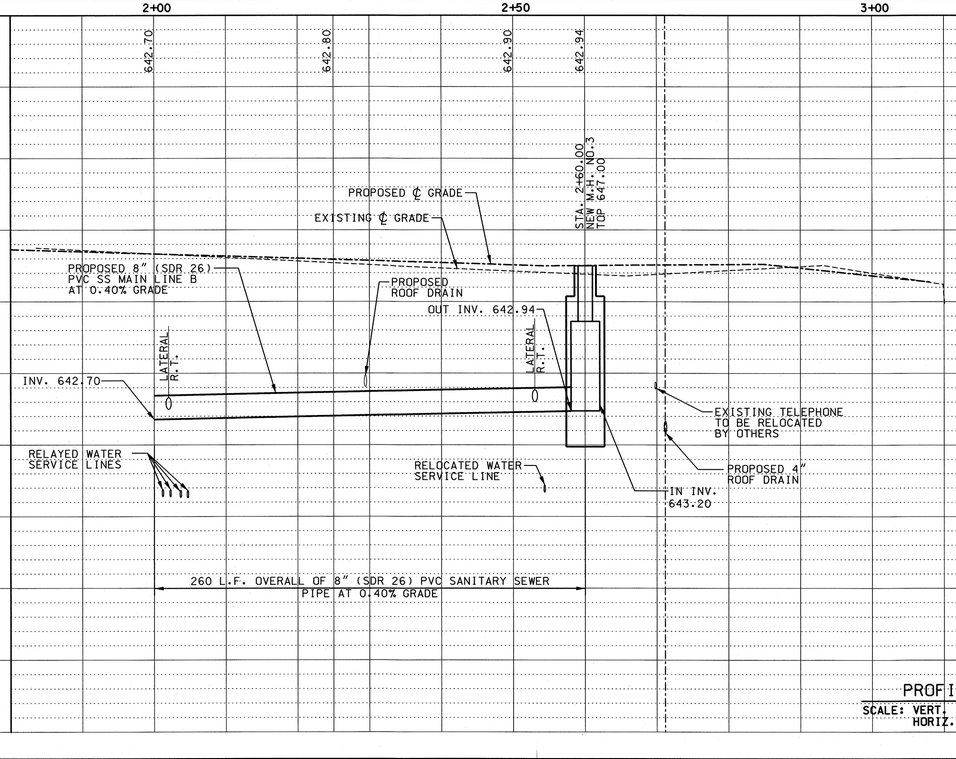

PROFILE

SCALE: VERT. 1" = 2'
HORIZ. 1" = 10'

AS BUILT/PLAN RECORD DRAWINGS

I HEREBY CERTIFY THAT THIS AS-BUILT/PLAN OF RECORD IS TRUE AND CORRECT TO THE BEST OF MY KNOWLEDGE AND WAS PREPARED UNDER MY SUPERVISION.

7-9-10

NOTE: INFORMATION FOR THESE AS-BUILT/PLAN OF RECORD DRAWINGS WAS SUPPLIED BY THE CONTRACTOR AND SAWS. MYLAR PLANS IN DIGITAL FORMAT ARE REPRESENTATIVE OF THAT INFORMATION WHICH WAS SUPPLIED.

TRENCH EXCAVATION SAFETY PROTECTION

CONTRACTOR AND/OR CONTRACTOR'S INDEPENDENTLY RETAINED EMPLOYEE OR STRUCTURAL DESIGN/GEOTECHNICAL/SAFETY/EQUIPMENT CONSULTANT, IF ANY, SHALL REVIEW THESE PLANS AND AVAILABLE GEOTECHNICAL INFORMATION AND THE ANTICIPATED INSTALLATION SITE(S) WITHIN THE PROJECT WORK AREA IN ORDER TO IMPLEMENT CONTRACTOR'S TRENCH EXCAVATION SAFETY PROTECTION SYSTEMS, PROGRAMS, AND/OR PROCEDURES FOR THE PROJECT DESCRIBED IN THE CONTRACT DOCUMENTS. THE CONTRACTOR'S IMPLEMENTATION OF THESE SYSTEMS, PROGRAMS AND/OR PROCEDURES SHALL PROVIDE FOR ADEQUATE TRENCH EXCAVATION SAFETY PROTECTION THAT COMPLY WITH AS A MINIMUM, OSHA STANDARDS FOR TRENCH EXCAVATIONS. SPECIFICALLY CONTRACTOR AND/OR CONTRACTOR'S INDEPENDENTLY RETAINED EMPLOYEE OR SAFETY CONSULTANT SHALL IMPLEMENT A TRENCH SAFETY PROGRAM IN ACCORDANCE WITH OSHA STANDARDS GOVERNING THE PRESENCE AND ACTIVITIES OF INDIVIDUALS WORKING IN AND AROUND TRENCH EXCAVATION.

SAN ANTONIO WATER SYSTEM NOTE:

LOCATION AND DEPTH OF EXISTING WATER MAINS AND SERVICES SHOWN ON THE PLANS ARE APPROXIMATE ONLY. ACTUAL LOCATIONS AND DEPTHS MUST BE VERIFIED BY THE CONTRACTOR 48 HOURS PRIOR TO BEGINNING CONSTRUCTION BY CALLING THE SAWS WATER LINE LOCATOR AT 233-2010. THE CONTRACTOR SHOULD EXERCISE EXTREME CAUTION WHEN WORKING NEAR EXISTING WATER FACILITIES, AND SHOULD THEY BE DAMAGED DURING CONSTRUCTION OPERATIONS, THE CONTRACTOR WILL BE REQUIRED TO REIMBURSE THE SAN ANTONIO WATER SYSTEM FOR THE TOTAL COST TO REPAIR OR REPLACE THE DAMAGED FACILITIES.

SBC SOUTHWESTERN BELL TELEPHONE COMPANY NOTE:

THE EXISTENCE AND LOCATION OF UNDERGROUND CABLE INDICATED ON THE PLANS ARE TAKEN FROM THE BEST RECORDS AVAILABLE AND ARE NOT GUARANTEED TO BE ACCURATE. CONTRACTOR TO CONTACT THE TELEPHONE COMPANY CABLE LOCATOR 48 HOURS PRIOR TO EXCAVATION AT 1-800-344-8377. CONTRACTOR TO PROTECT AND SUPPORT TELEPHONE COMPANY PLANT DURING CONSTRUCTION.

CITY PUBLIC SERVICE NOTES:

1. CALL THE TEXAS-WIDE ONE CALL LOCATOR AT 1-800-344-8377, 48 HOURS BEFORE BEGINNING ANY EXCAVATION.
2. DUE TO FEDERAL REGULATION TITLE 49, PART 192.181, CPS MUST MAINTAIN ACCESS TO GAS VALVES AT ALL TIMES. THE CONTRACTOR MUST PROTECT AND WORK AROUND ANY GAS VALVES THAT ARE IN THE PROJECT AREA.
3. THE CONTRACTOR SHALL BE RESPONSIBLE FOR PROTECTING CPS OVERHEAD AND UNDERGROUND ELECTRIC FACILITIES IF ADJACENT TO WORK AREAS.
4. THE CONTRACTOR IS RESPONSIBLE FOR MAINTAINING AND PROTECTING THE INTEGRITY OF THE POWER POLES AND LIGHT STANDARDS DURING CONSTRUCTION. REFER TO WORK CLEARANCE ZONES FOR CPS UTILITIES DRAWING FOR FUTHER DETAILS.

TIME WARNER CABLE NOTE:

CONTRACTOR TO CONTACT THE TEXAS-WIDE ONE CALL LOCATOR AT 1-800-344-8377, 48 HOURS PRIOR TO EXCAVATION. CONTRACTOR IS RESPONSIBLE FOR PROTECTING AND SUPPORTING CABLE TV PLANT DURING CONSTRUCTION.

TREE PRESERVATION NOTE:

ALL TREES WITHIN THE R.O.W. SHALL BE PRESERVED OR REMOVED IN ACCORDANCE WITH THE REQUIREMENTS SHOWN ON THE TREE PRESERVATION PLANS INCLUDED AS PART OF THE DRAWING SET.

RIALTO STUDIO
Rialto Studio, Inc.
Landscape Architecture
2425 Broadway, Suite 105
San Antonio, Texas 78215
p. 210.828.1155
f. 210.828.1399

No.	Revision	Drawn	Approved	Date
	AS BUILT/PLAN RECORD DRAWINGS			7/10/07

REVISIONS

MARKET SQUARE REHABILITATION, PHASE I
SANITARY SEWER WORKS
SANITARY SEWER PLAN & PROFILE III

DEVELOPER:
CONT. | BUDGET PROJ. 33
SUBMITTED
APPROVED
MAP No. 158-578 | SHEET SS6 OF 8
SECT. No.
DR. D.B. | CK. K.W.C. | JOB No. 04-5535

K.M. NG & ASSOCIATES, INC.
CONSULTING ENGINEERS
SAN ANTONIO, TEXAS 78201

STATE OF TEXAS
KUM WING CHAN
65399
REGISTERED PROFESSIONAL ENGINEER

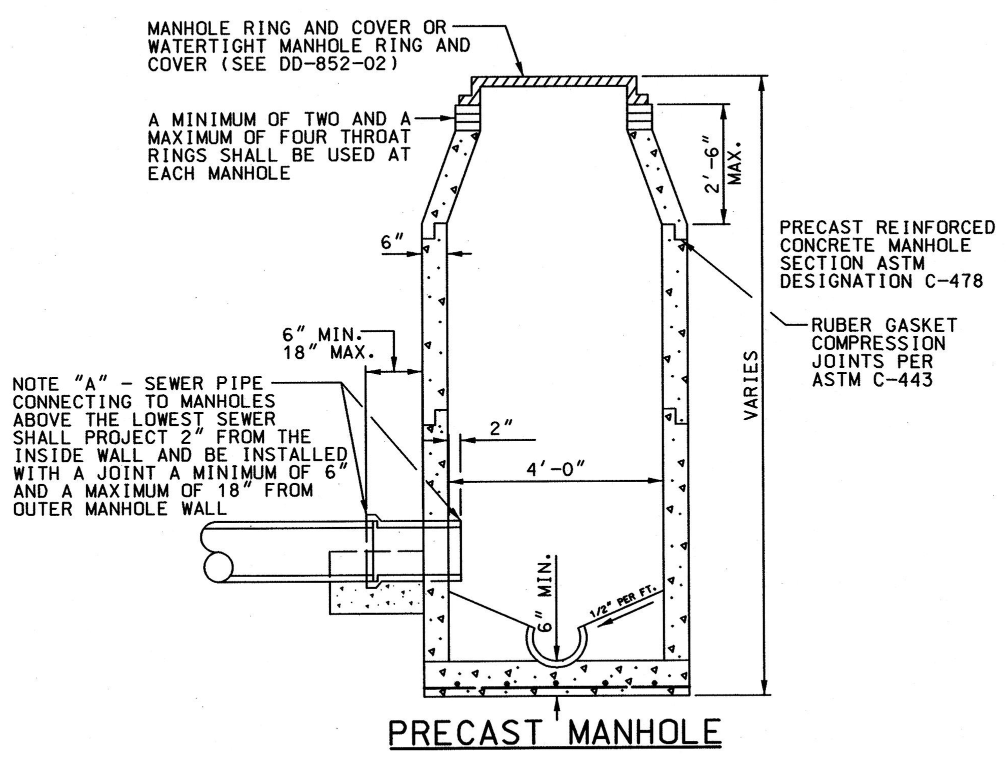

PRECAST MANHOLE

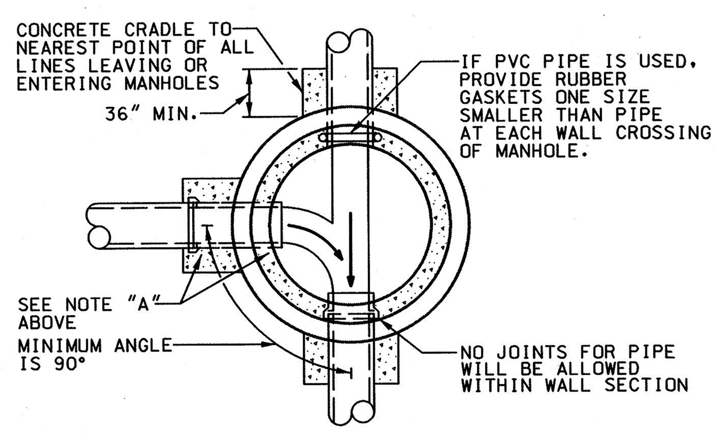

MANHOLE FLOOR PLAN

GENERAL NOTES:

1. MATERIAL FOR SANITARY SEWER PIPE MUST BE THE SAME FROM MANHOLE TO MANHOLE. CHANGES IN TYPE OF PIPE MAY BE MADE ONLY AT MANHOLES, OR SPECIAL STRUCTURES, EXCEPT AS APPROVED BY THE SAWS PROJECT ENGINEER.
2. ADAPTORS AND CONCRETE COLLARS SHALL BE USED AS DIRECTED BY THE ENGINEER AND AS APPROVED BY THE SAWS PROJECT ENGINEER.
3. WATERTIGHT MANHOLE RINGS AND COVERS SHALL BE TRANS-TEX A77 "O" RING OR APPROVED EQUAL.
4. THE MINIMUM ANGLE OF FLOW FOR A CONNECTING SEWER TO THE DIRECTION OF FLOW DEFINED BY A COLLECTION SYSTEM IS 90 DEGREES, UNLESS APPROVED BY SAWS.

STANDARD PRECAST MANHOLE

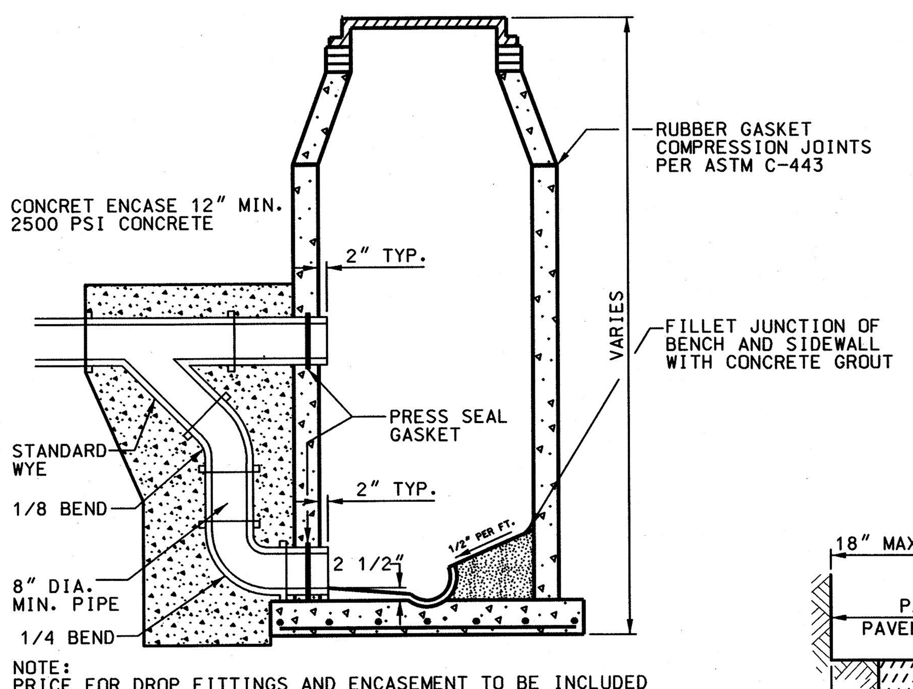

NOTE:
PRICE FOR DROP FITTINGS AND ENCASEMENT TO BE INCLUDED WITH THE PRICE OF MANHOLE

DROP MANHOLE DETAIL

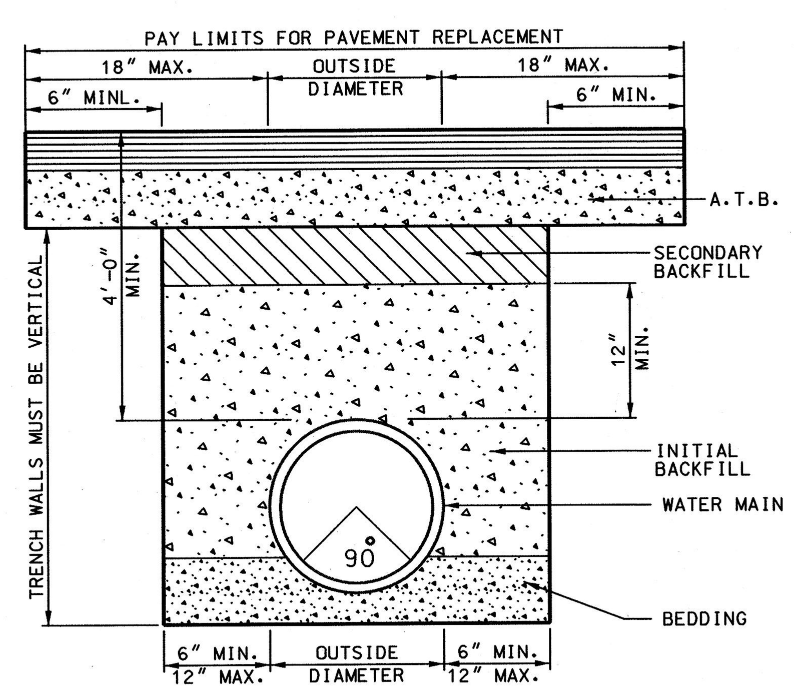

POTABLE AND RECYCLED WATER MIAN DETAIL

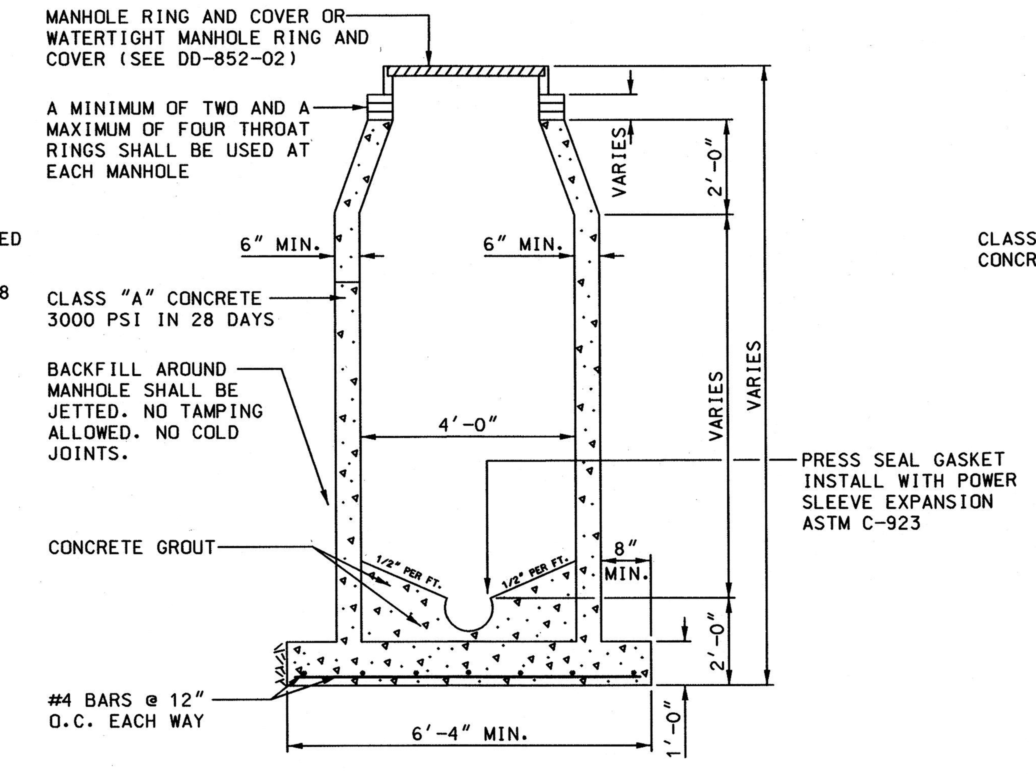

MONOLITHIC MANHOLE

GENERAL NOTES:

1. MATERIAL FOR SANITARY SEWER PIPE MUST BE THE SAME FROM MANHOLE TO MANHOLE. CHANGES IN TYPE OF PIPE MAY BE MADE ONLY AT MANHOLES, OR SPECIAL STRUCTURES, EXCEPT AS APPROVED BY THE SAWS PROJECT ENGINEER.
2. ADAPTORS AND CONCRETE COLLARS SHALL BE USED AS DIRECTED BY THE ENGINEER AND AS APPROVED BY THE SAWS PROJECT ENGINEER.
3. WATERTIGHT MANHOLE RINGS AND COVERS SHALL BE TRANS-TEX A77 "O" RING OR APPROVED EQUAL.

STANDARD MONOLITHIC MANHOLE

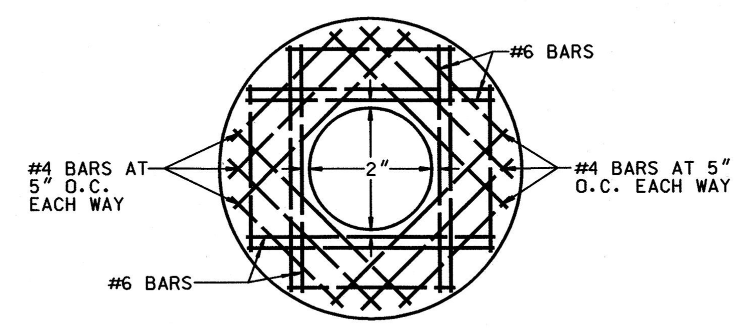

TOP SLAB

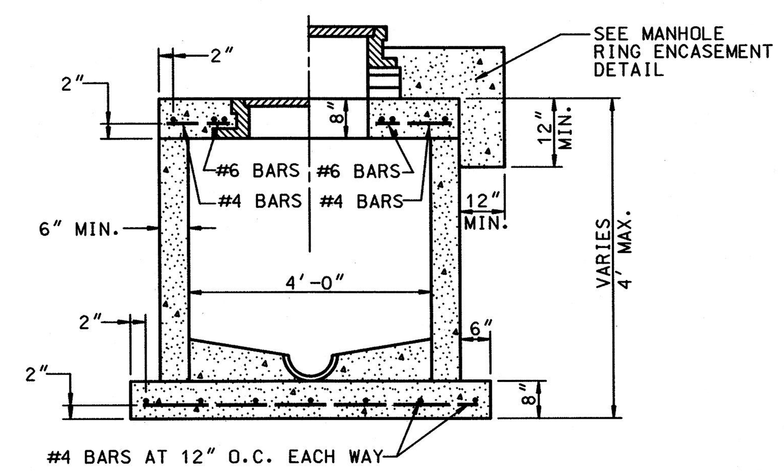

SHALLOW MANHOLE
PRECAST OR MONOLITHIC

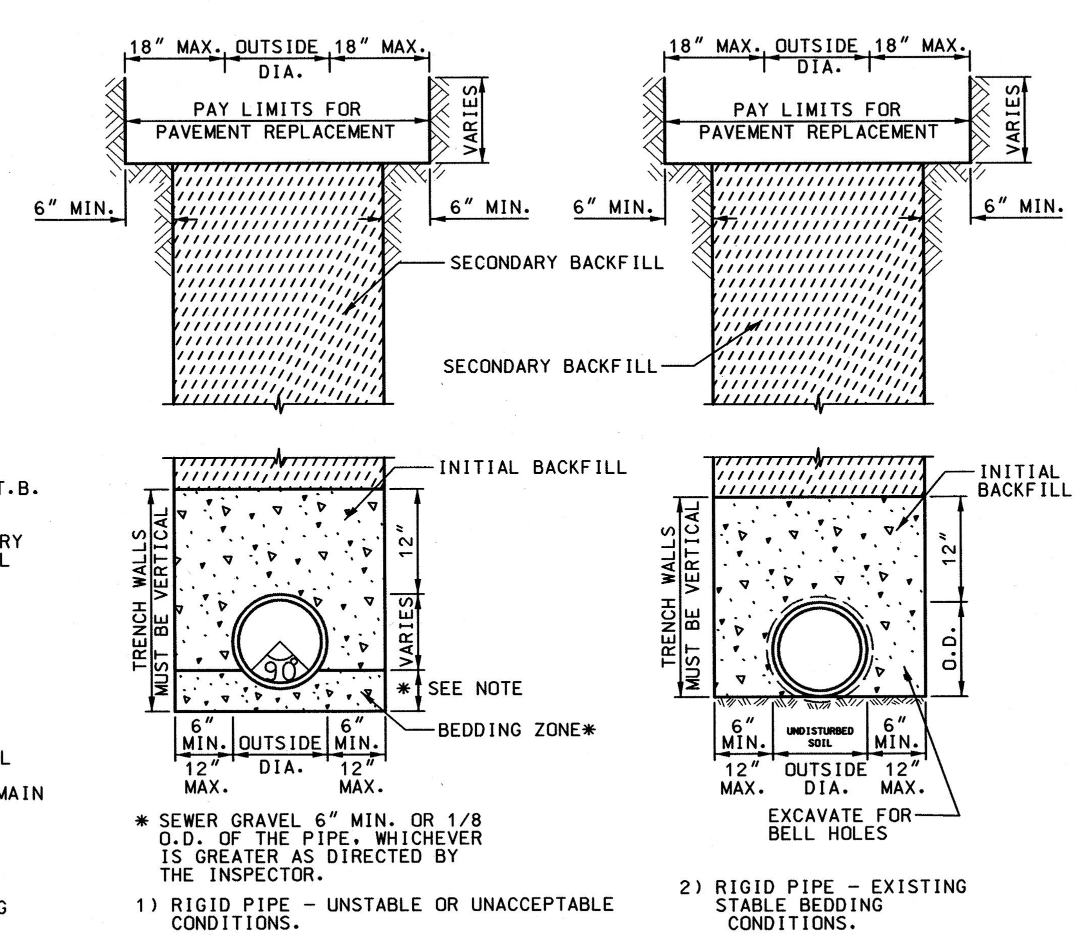

* SEWER GRAVEL 6" MIN. OR 1/8 O.D. OF THE PIPE, WHICHEVER IS GREATER AS DIRECTED BY THE INSPECTOR.

1) RIGID PIPE - UNSTABLE OR UNACCEPTABLE CONDITIONS.

2) RIGID PIPE - EXISTING STABLE BEDDING CONDITIONS.

FLEXIBLE PIPE - ALL CONDITIONS

SANITARY SEWER PIPE LAID IN TRENCH

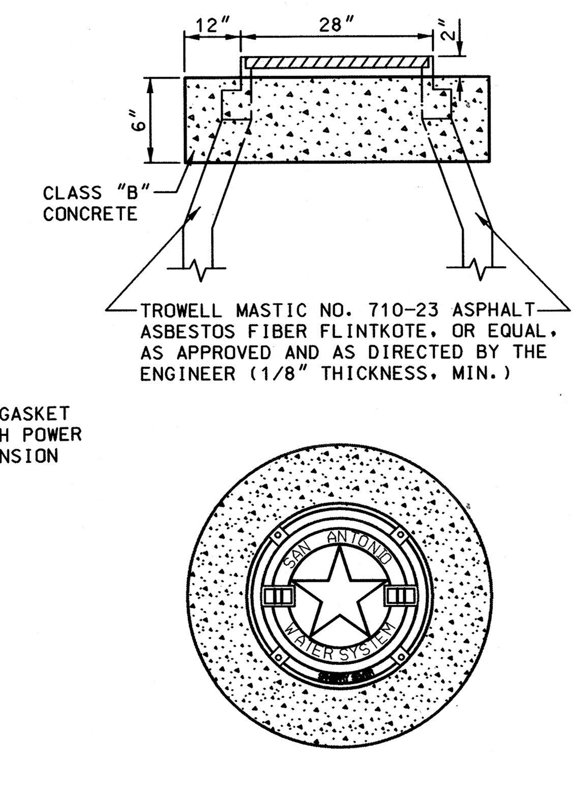

MANHOLE RING ENCASEMENT DETAIL

NOTE:
MANHOLE RING ENCASEMENT IS REQUIRED ON ALL MANHOLES.

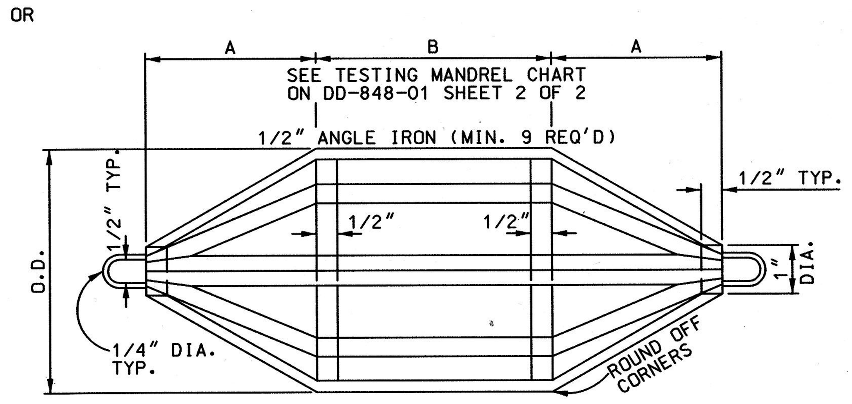

SIDE OR TOP VIEW

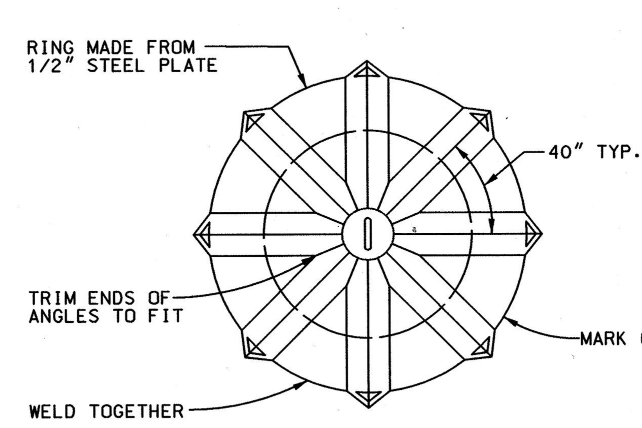

END VIEW

NOTE:
AL MANDRELS MUST BE APPROVED BY SAWS CONSTRUCTION INSPECTIONS AND STAMPED BEFORE USE.

GO, NO GO DEFLECTION TESTING MANDREL

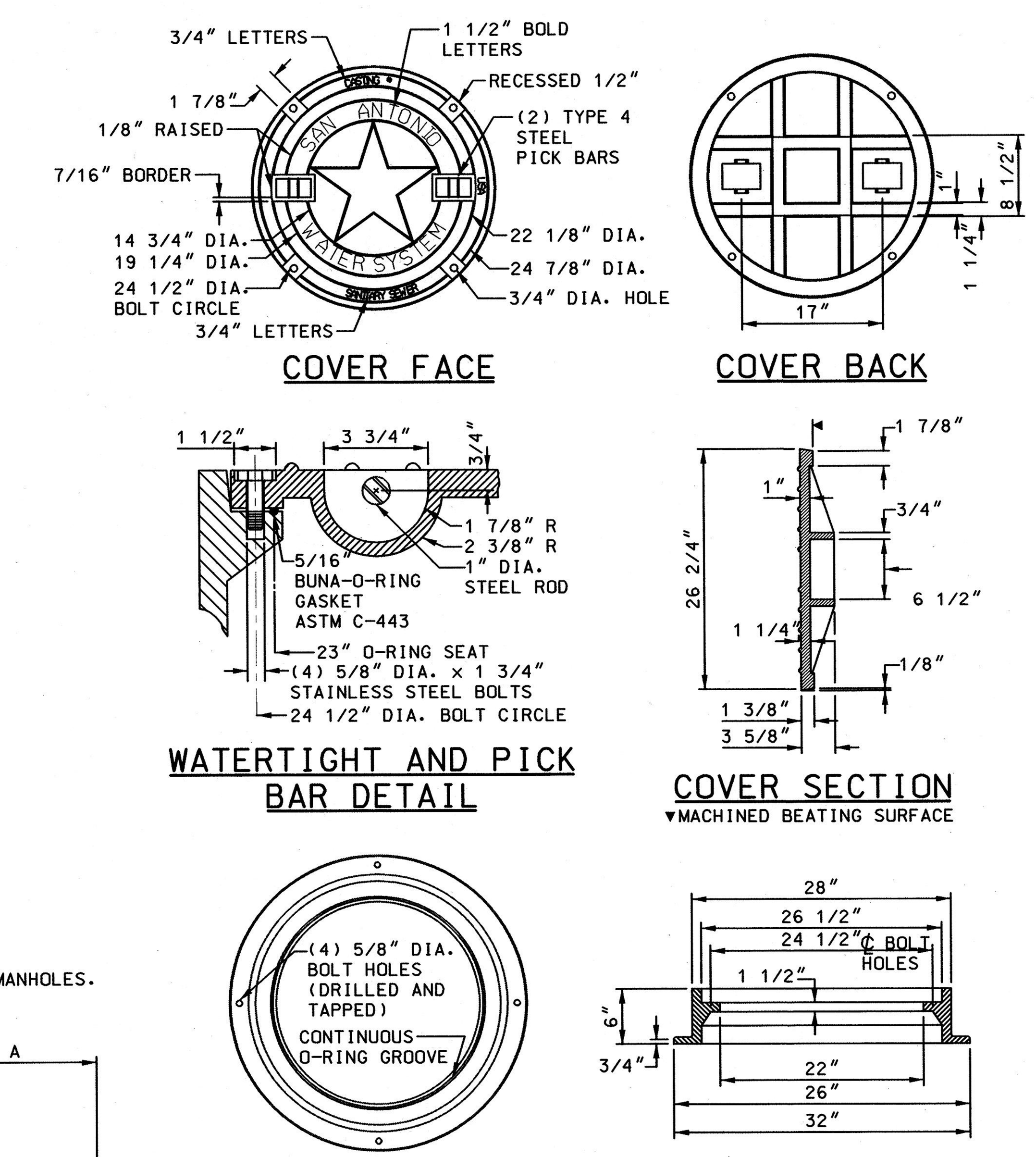

COVER FACE — COVER BACK — WATERTIGHT AND PICK BAR DETAIL — COVER SECTION (*MACHINED BEATING SURFACE) — FRAME TOP VIEW — FRAME SECTION

MANHOLE RING AND COVER DETAIL

SIZE	A	B*	MANDREL O.D. PSM (SDR-35)	MANDREL O.D. PSM (SDR-26)	MANDREL O.D. LARGE DIA. RIBBED	RING O.D. PSM (SDR-35)	RING O.D. PSM (SDR-26)	RING O.D. LARGE DIA. RIBBED
6"	4.0"	4"	5.56	5.43	——	4.85	4.72	——
8"	5.3"	6"	7.45	7.28	——	6.74	6.57	——
10"	6.7"	6"	9.32	9.10	——	8.61	8.39	——
12"	8.0"	8"	11.08	10.83	——	10.37	10.12	——
15"	10.0"	9"	13.57	13.26	——	12.86	12.55	——
18"	12.0"	11"	16.58	——	16.72	15.89	——	16.01
21"	14.0"	12"	19.56	——	19.66	18.85	——	18.95
24"	16.0"	15"	22.00	——	22.26	21.29	——	21.55
27"	18.0"	16"	24.80	——	25.10	24.09	——	24.39
30"	20.0"	18"	——	——	27.94	——	——	27.23
36"	24.0"	21"	——	——	33.63	——	——	32.92
40"	26.8"	24"	——	——	37.41	——	——	36.70
48"	32.0"	29"	——	——	44.99	——	——	44.28

* MINIMUM LENGTH

CHART

NOTES:

PVC PIPES AND FITTINGS SIX INCHES (6") TO FIFTEEN INCHES (15") IN DIAMETER SHALL CONFORM TO ASTM D-3034.

PVC PIPES AND FITTINGS EIGHTEEN INCHES (18") TO TWENTY-SEVEN INCHES (27") IN DIAMETER SHALL CONFORM TO ASTMF-679.

THIS INFORMATION IS PROVIDED AS A REFERENCE. ALL DEFLECTION TESTING SHALL BE DONE IN ACCORDANCE WITH TCEQ CHAPTER 317.

GO, NO GO DEFLECTION TESTING MANDREL CHART

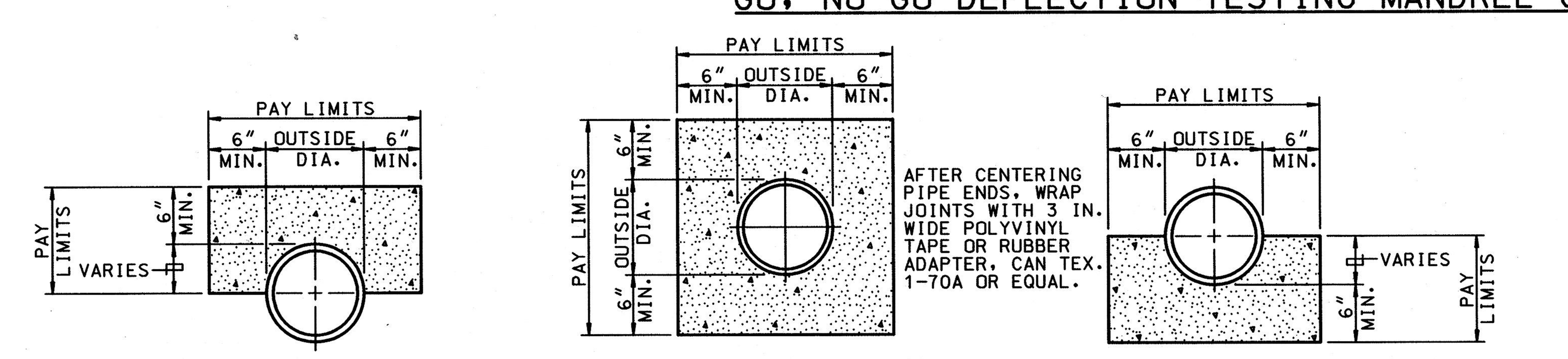

TYPICAL CONCRETE SADDLE — CONC. JOINTING COLLAR — TYPICAL CONCRETE CRADLE

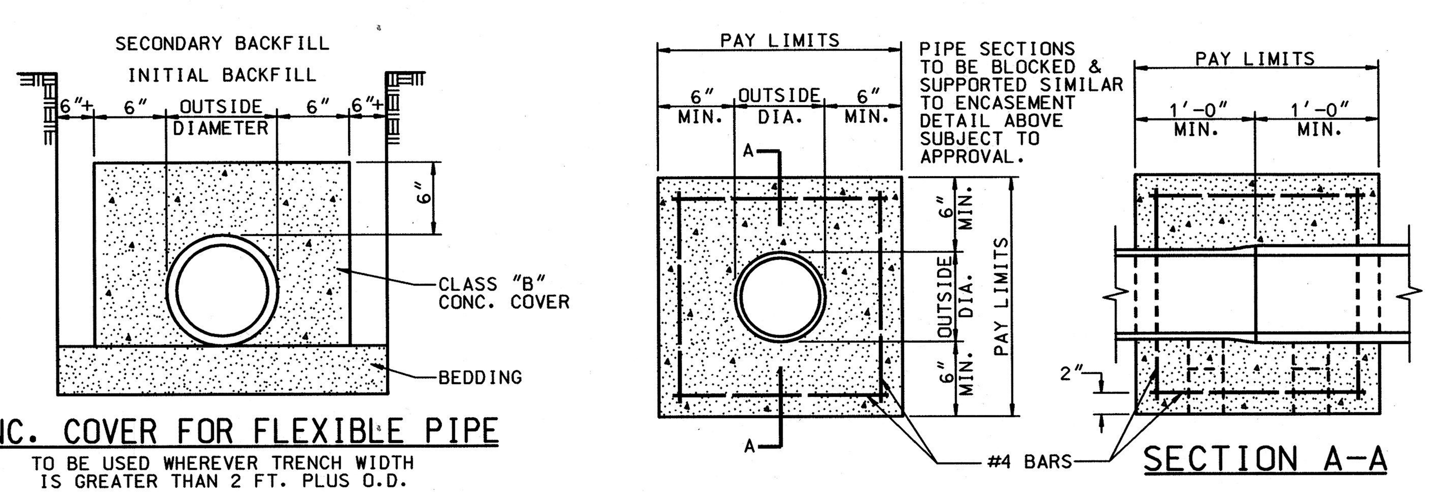

CONC. COVER FOR FLEXIBLE PIPE

TO BE USED WHEREVER TRENCH WIDTH IS GREATER THAN 2 FT. PLUS O.D.

SECTION A-A

TYPICAL CONCRETE ENCASEMENT

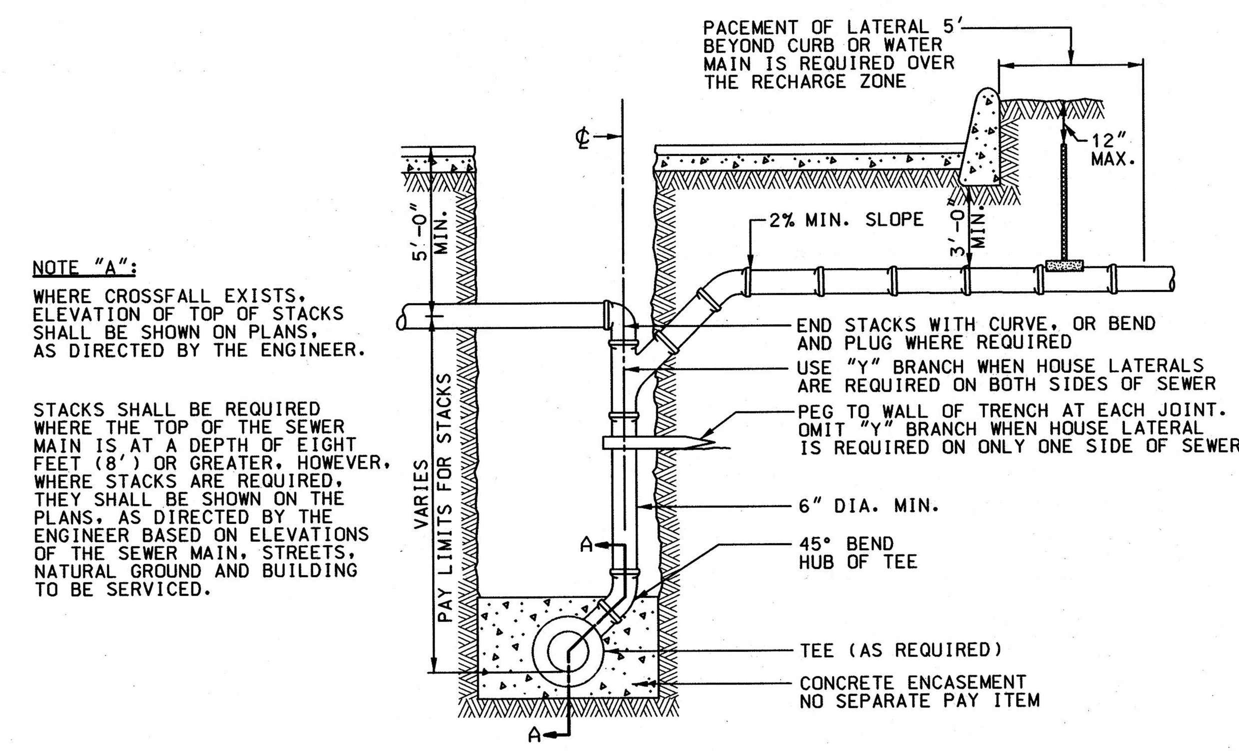

NOTE "A":
WHERE CROSSFALL EXISTS, ELEVATION OF TOP OF STACKS SHALL BE SHOWN ON PLANS, AS DIRECTED BY THE ENGINEER.

STACKS SHALL BE REQUIRED WHERE THE TOP OF THE SEWER MAIN IS AT A DEPTH OF EIGHT FEET (8') OR GREATER. HOWEVER, WHERE STACKS ARE REQUIRED, THEY SHALL BE SHOWN ON THE PLANS, AS DIRECTED BY THE ENGINEER BASED ON ELEVATIONS OF THE SEWER MAIN, STREETS, NATURAL GROUND AND BUILDING TO BE SERVICED.

VERTICAL STACK DETAIL

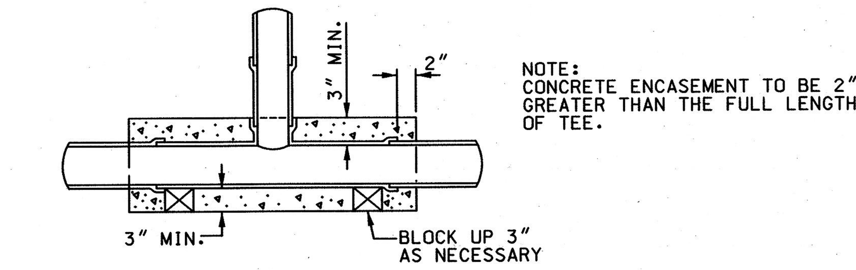

NOTE:
CONCRETE ENCASEMENT TO BE 2" GREATER THAN THE FULL LENGTH OF TEE.

SECTION A-A
TYPICAL VERTICAL STACK DETAIL

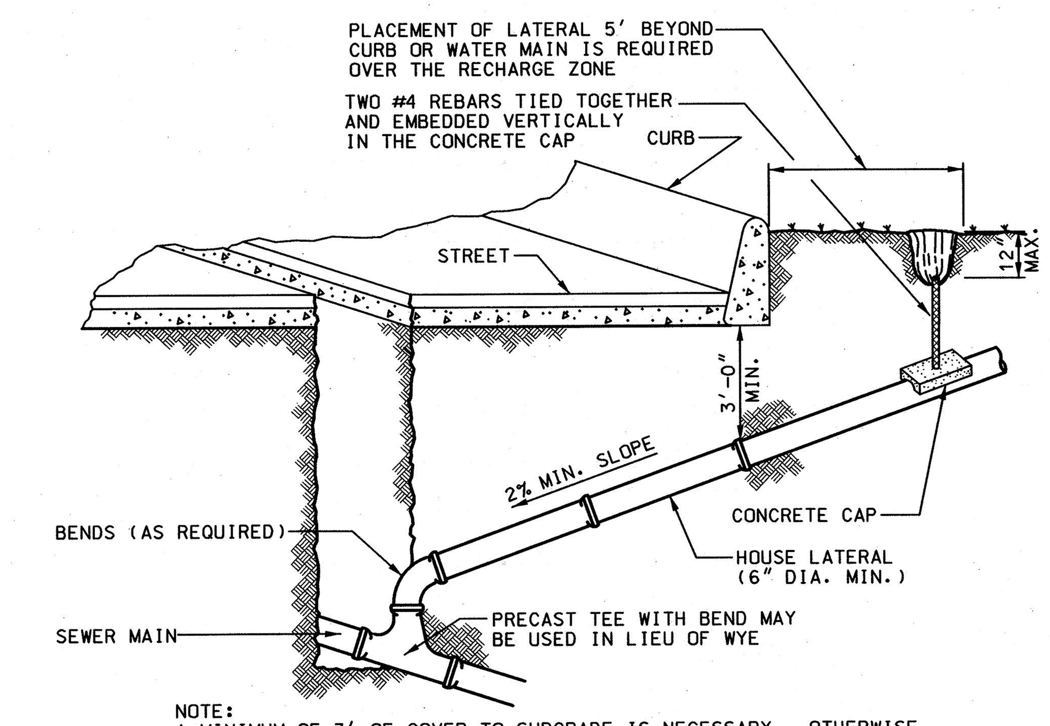

NOTE:
A MINIMUM OF 3' OF COVER TO SUBGRADE IS NECESSARY. OTHERWISE CONCRETE ENCASEMENT WILL BE REQUIRED.

HOUSE LATERAL DETAIL

GENERAL NOTES

1. ALL CONSTRUCTION AND MATERIALS SHALL BE IN STRICT CONFORMANCE WITH APPLICABLE PROVISION OF "STANDARD SPECIFICATIONS FOR PUBLIC WORKS CONSTRUCTION".
2. MANHOLE RINGS AND COVERS SHALL BE TRANS-TEX A77, OR EQUAL. WHEN WATERTIGHT MANHOLE RINGS AND COVERS ARE SPECIFIED, THEY SHALL BE TRANS-TEX A77 "O" RING OR EQUAL.

3a. MATERIAL FOR SANITARY SEWER PIPE MUST BE THE SAME FROM MANHOLE TO MANHOLE. CHANGES IN TYPE OF PIPE MAY BE MADE, ONLY, AT MANHOLES, OR SPECIAL STRUCTURES, EXCEPT AS APPROVED BY THE SEWER ENGINEER.

b. ADAPTERS AND CONCRETE COLLARS SHALL BE USED, ONLY, AS DIRECTED BY THE ENGINEER, AND AS APPROVED BY THE SEWER ENGINEER.

4. ALL SEWER PIPE WITH LESS THAN THREE FEET (3') OF COVER SHALL BE CONCRETE ENCASED AS PER ITEM NO. 407.
5. ALL FORCE MAINS SHALL BE PROVIDED WITH THRUST BLOCKS, WHERE CHANGES IN DIRECTION OCCUR, AT TEES, BENDS, CROSSES, CHANGES IN SIZE, STOPS (DEAD ENDS), VALVES AND/OR AS SHOWN BELOW, OR AS DIRECTED BY THE ENGINEER.

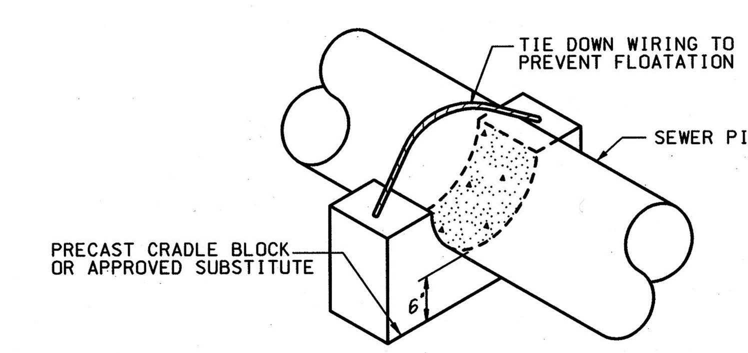

TYPICAL SUPPORT FOR ENCASEMENT OR CRADLE

AS BUILT/PLAN RECORD DRAWINGS

I HEREBY CERTIFY THAT THIS AS-BUILT/PLAN OF RECORD IS TRUE AND CORRECT TO THE BEST OF MY KNOWLEDGE AND WAS PREPARED UNDER MY SUPERVISION.

[signature] 7-9-10

NOTE: INFORMATION FOR THESE AS-BUILT/PLAN OF RECORD DRAWINGS WAS SUPPLIED BY THE CONTRACTOR AND SAWS. MYLAR PLANS IN DIGITAL FORMAT ARE REPRESENTATIVE OF THAT INFORMATION WHICH WAS SUPPLIED.

K.M. NG & ASSOCIATES, INC.
CONSULTING ENGINEERS
SAN ANTONIO, TEXAS 78201

RIALTO STUDIO
Rialto Studio, Inc.
Landscape Architecture
2425 Broadway, Suite 100
San Antonio, Texas 78215
p. 210.828.1155
f. 210.828.1399

No.	Revision	Drawn	Approved	Date
	AS BUILT/PLAN RECORD DRAWINGS			7/10/07

REVISIONS

MARKET SQUARE REHABILITATION, PHASE I
SANITARY SEWER WORKS
TYPICAL SECTIONS SANITARY SEWER STANDARDS

DEVELOPER:	
CONT.	BUDGET PROJ. 33
SUBMITTED	
APPROVED	
MAP No. 158-578	SHEET SS7
SECT. No.	
DR. D.B. CK. K.W.C. JOB No. 04-5535	OF 8

I:\Projects\Active\50_Casa\50161\sssstd.dgn
7/9/2010 8:27:53 AM naleman

RIALTO STUDIO
Rialto Studio, Inc.
Landscape Architecture
2425 Broadway, Suite 105
San Antonio, Texas 78215
p. 210.828.1155
f. 210.828.1399

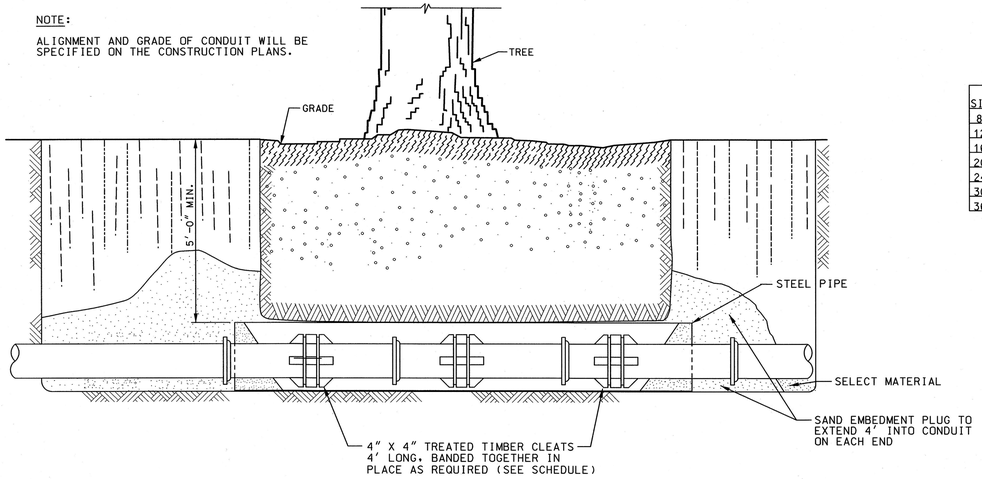

1 SS8 INSTALLATION OF SANITARY SEWER MAIN IN BORE
NO SCALE

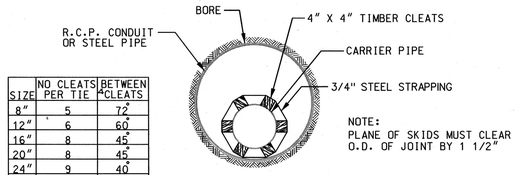

SIZE	NO CLEATS PER TIE	BETWEEN CLEATS
8"	5	72"
12"	6	60"
16"	8	45"
20"	8	45"
24"	9	40"
30"	15	24"
36"	24	15"

SECTION A-A

STEEL PIPE CASING/WATER MAIN		
PIPE SIZE (INCHES)	PIPE THICKNESS (INCHES)	PIPE WEIGHT (LBS/FT)
6	0.375	25.03
8	0.375	33.04
12	0.375	45.55
36	0.562	212.70

WATER MAINS IN CONDUIT			
WATER MAIN SIZE (INCHES)	NOM. DIA. RCP* OR STEEL (INCHES)	STEEL PIPE THICKNESS (INCHES)	PIPE WEIGHT (LBS/FT.)
6	18	0.375	70.59
8	24	0.375	94.62
12	24	0.375	94.62
20	36	0.438	166.19

* CLASS III OR IV TONGUE AND GROOVE, FOR NON-RAILROAD APPLICATIONS

2 SS8 INSTALLATION OF PIPE IN CONDUIT SCHEDULE
NO SCALE

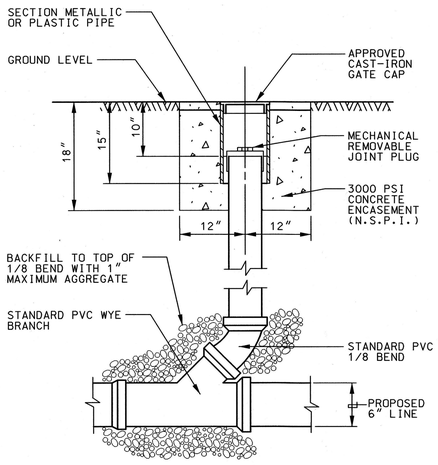

ELEVATION

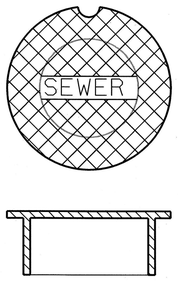

APPROVED GATE CAP
(HEAVY DUTY)

3 SS8 TYPICAL CLEANOUT DETAIL
NO SCALE

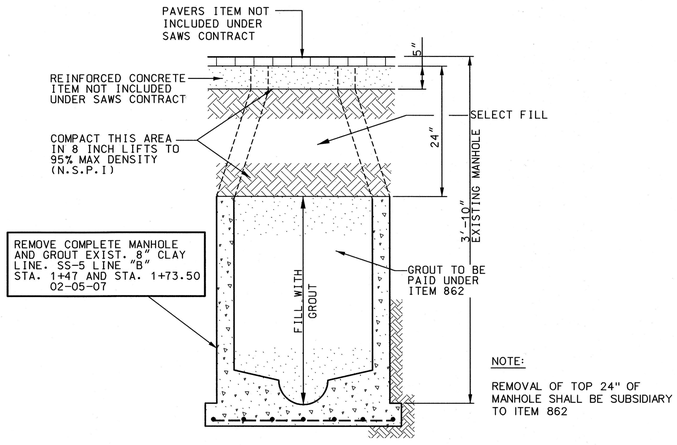

4 SS8 METHOD OF ABANDONING EXIST. SS MANHOLE
NO SCALE

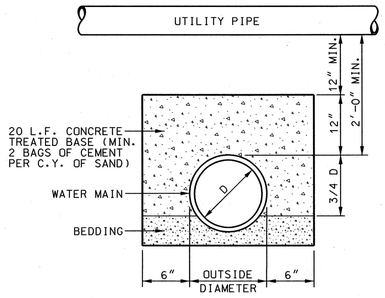

5 SS8 UTILITY CROSSING ENCASEMENT DETAIL
NO SCALE

AS BUILT/PLAN RECORD DRAWINGS

I HEREBY CERTIFY THAT THIS AS-BUILT/PLAN OF RECORD IS TRUE AND CORRECT TO THE BEST OF MY KNOWLEDGE AND WAS PREPARED UNDER MY SUPERVISION.

7-9-10

NOTE: INFORMATION FOR THESE AS-BUILT/PLAN OF RECORD DRAWINGS WAS SUPPLIED BY THE CONTRACTOR AND SAWS. MYLAR PLANS IN DIGITAL FORMAT ARE REPRESENTATIVE OF THAT INFORMATION WHICH WAS SUPPLIED.

No.	Revision	Drawn	Approved	Date
	AS BUILT/PLAN RECORD DRAWINGS			7/10/07

REVISIONS

MARKET SQUARE REHABILITATION, PHASE I
SANITARY SEWER WORKS

MISCELLANEOUS DETAILS

DEVELOPER:

CONT. | BUDGET PROJ. 33

SUBMITTED

APPROVED

MAP No. 158-578 | SHEET SS8

SECT. No.

DR. D.B. | CK. K.W.C. | JOB No. 04-5535 | OF 8

STATE OF TEXAS
KUM WING CHAN
65399
REGISTERED PROFESSIONAL ENGINEER

K.M. NG & ASSOCIATES, INC.
CONSULTING ENGINEERS
SAN ANTONIO, TEXAS 78201